Wheel & Castor Catalogue

WHEEL & CASTOR

Reids

OF NOTTINGHAM

SPECIALISTS

REIDS OF NOTTINGHAM

30 Miall Street Radford Nottingham NG7 2AQ

Telephone 0115 978 6004 Fax 0115 942 2919

Email sales@reidsofnottingham.co.uk Web www.reidsofnottingham.co.uk

Castor Selection Advice

USE THIS GUIDE TO HELP IDENTIFY THE RIGHT CASTOR OR WHEEL FOR YOUR REQUIREMENTS.

Castor Fitting Options

What mode of fitting will suit your application best?

Bolt Hole — A single central bolt hole fixing

Top Plate — Usually a rectangular or square plate with 4 fixing holes.

Expander — A single bolt hole bracket prefitted with an adjustable expander to suit round or square tubing.

Weight Loading Considerations

To be sure that the load capacity of individual castors will safely handle the total weight of equipment to be carried, use the following method to determine your requirements.

On equipment to be fitted with 4 castors take the total weight of the equipment plus the weight of the trolley / mount and divide by 3. This will build in a safety factor to allow for variable operating conditions or uneven surfaces.

$$\text{Load Capacity of Castor} = \frac{\text{Load + Weight of Transport Equipment}}{3}$$

Choosing the right Wheel

In general terms the larger the wheel, the easier the equipment is to push or pull and overcome small obstructions. Bearings in wheels will also assist with ease of movement. Wheels can be divided into two basic types:

Hard Tread

These are the easiest to push and in many cases will be the first choice for ease of movement.

NYLON WHEELS are the most popular choice as they will not damage solid compacted floors such as cement or tile and have good load capacity.

CAST IRON WHEELS combine strength and shock resistance with long life and economy. They will withstand extremes of temperature but may cause floor wear and can be noisy.

Resilient Tread

These are kinder to flooring, although may need more effort to move.

POLYURETHANE WHEELS have good load carrying characteristics. High tear strength and abrasion resistance give these wheels a life of up to 10 times that of rubber.

RUBBER TYRED WHEELS are available in a wide range of sizes and load capacities with a choice of Nylon, Plastic, Cast Iron, Aluminium and Pressed Metal centres. Non-marking tyre options can be offered. Suitable for most floors.

Bearings

PLAIN BEARINGS will be suitable for lighter loads and where intermittent movement is required.

ROLLER BEARINGS are available on certain sizes to reduce the effort needed to move quite heavy loads.

BALL JOURNAL BEARINGS offer low friction and long working life. An essential for constant moving applications and all but the heaviest power towing uses.

TAPERED ROLLER BEARINGS good performance for high load capacities, adjustable play, ideal for power towing.

Special Applications

We can offer Castor ranges to suit specialist applications such as High and Low Temperatures, Low level castors, Stainless steel, Jacking or Gate Castors plus we offer a Re-tyring service.

Please Note

1 All specifications and recommendations are given to the best of our knowledge and ability. No liability is accepted for their application.

2 Specifications (by dimensions, description, illustration or otherwise) are approximate and are liable to change without notice especially with regard to developments and improvements.

3 Since load capacity ratings are only general recommendations they can be subject to wide variations under different working conditions.

4 Listing of goods does not necessarily imply that they are 'Ex stock' nor do we accept any obligation to supply them.

Sales
&
Technical Support

Tel 0115 978 6004
Fax 0115 942 2919
E sales@reidsofnottingham.co.uk
W www.reidsofnottingham.co.uk

INDEX

CASTORS FABRICATED & PRESSED			
Castor Type	Wheel Dia. (mm)	Load Cap. (kg)	Page(s)
Light Duty	40 - 200	14 - 320	1 - 5
Medium Duty	50 - 260	27 - 1000	7 - 12
Heavy Duty	100 - 400	150 - 4675	13 - 20
Extra Heavy Duty	200 - 400	250 - 11400	21 - 26

SPECIALIST CASTORS & ASSOCIATED PRODUCTS			
Castor Type	Wheel Dia. (mm)	Load Cap. (kg)	Page(s)
Glass Handling	35 - 50	12 - 20	38
Glides	n/a	50 - 250	5
High Temperature	80 - 150	100 - 450	31
Hospital & Medical	n/a	n/a	43
Jacking	75 - 250	80 - 2500	36 - 37
Kenrick (Shepherd)	50 - 62	50 - 75	5
Low Level	35 - 85	160 - 650	32
Footmaster	40 - 97	50 - 1500	40 - 41
Plate Skate	150	250	34
Pneumatic Tyred	160 - 260	135 - 205	30
Re-Tyring Service	n/a	n/a	24
Scene Shifters	50 - 125	300 - 460	30
Shock Absorbing	63 - 200	100 - 740	42
Stainless Steel	80 - 200	150 - 400	9
Truck Locks	n/a	n/a	35
Twin Wheel Castors	50 - 125	40 - 100	8

WHEELS			
Anti Static & Electro Conductive	75 - 150	22 - 250	60
Cast Iron & Steel	50 - 250	61 - 7025	54 - 55
Demountable Rubber Tyres	200 - 300	250 - 800	50
Elastic Rubber Tyre, Alumin Ctr	125 - 200	250 - 400	50, 52
Elastic Rubber Tyre, Nylon Ctr	50 - 200	27 - 450	45
Flanged & 'V' Grooved	55 - 600	160 - 33600	55
Nylon / Polypropylene	40 - 250	18 - 605	44, 46
Pallet Rollers	82 - 85	500 - 1000	56
Phenolic Resin	75 - 200	100 - 725	60
Pneumatic Tyres	200 - 400	100 - 305	49
Polyurethane Tyre, Cast Iron Ctr	75 - 500	150 - 6120	50, 57- 59
Polyurethane Tyre, Nylon Ctr	80 - 200	100 - 650	45
Rubber Tyre, Cast Iron Ctr	50 - 400	40 - 6700	55 - 58
Rubber Tyre, Plastic / Nylon Ctr	40 - 355	14 - 450	42 44 49
Rubber Tyre, Steel Ctr	100 - 450	70 - 750	44 45 47

Light Duty Castors

Light duty twin wheel castors suitable for use with a wide range of furniture and equipment.
Bodies and fixings can be supplied seperately to make fixings easier in some situations.
Ask the sales desk for details. Stem and Socket fittings will require a predrilled 9.5mm hole for fitting.

Black Polypropylene Wheel style

80mm Nylon Castors

Wheel Dia. (mm)	Load Cap. (kg)	Fitting Height (mm)	Plate / Bolt Ctrs or Stem Dimensions		Wheel Type	Catalogue Reference	
			Plate	Ctrs / Stem		Swivel	Braked
Threaded Stem Fitting Castors							
40	40	50	n/a	M8 X 15	Black Nylon	TW40TS	TW40TSB
50	50	58	n/a	M10 X 15	Black Nylon	TW50TS	TW50TSB
80	75	91	n/a	M10 X 15	Black Nylon	TW80TS	TW80TSB
Top Plate Fitting Castors							
40	40	58	38 X 38	26 X 26	Black Nylon	TW40PL	TW40PLB
50	50	63	38 X 38	26 X 26	Black Nylon	TW50PL	TW50PLB
80	75	97	63 X 63	44 X 44	Black Nylon	TW80PL	TW80PLB
Stem and Socket Fitting Castors							
50	50	58	n/a	M8 X 36	Black Nylon	TW50SS	TW50SSB

Sales & Technical Support

sales

Tel: 0115 9786 004

Fax: 0115 9422 919

email: sales@reidsofnottingham.co.uk

or visit us at our webpages

www.reidsofnottingham.co.uk

Shepherd Castors

A range of instantly recognisable classic design furniture castors. The reliability of this design is well known by both furniture manufacturers and users.

Shown with: **Grey Polyurethane Tyred Wheel**

Shown with: **Anti-static Wheel**

Shown with: **Standard Wheel**

Wheel Dia. (mm)	Load Cap. per Set of 4 (kg)	Height (mm)		Plate/Fitting Dimensions (mm)		Suits Bolt Dia. (mm)	Fitting Type	Catalogue Reference		
		Standard	Tyred	Plate	Stem/Peg			Standard Metal Tread	Grey Polyurethane Tyre	Black Anti-Static Tyre
50	200	65	68	38 X 38	-	4	Square Plate	41	41PTYRE	41AS
50	200	60	63	-	M8 X 16	-	Threaded Stem	44	44PTYRE	44AS
50	200	60	63	27 Dia.	-	4	Round Plate	45	45PTYRE	45AS
50	200	55	58	-	9.5 X 32	-	Stem & Peg for hole fitting	46	46PTYRE	46AS
62	300	74	78	38 X 38	-	4	Square Plate	51	51PTYRE	51AS
62	300	74	78	102 X 38	-	4	Corner Plate	52	52PTYRE	52AS
62	300	72	76	-	M10 X 14	-	Threaded Stem	54	54PTYRE	54AS
62	300	72	76	76 X 38	-	4	Rectangular Plate	60	60PTYRE	60AS

Adjustable Tilt Glides

Glide base material is black polypropylene and the stem material is bright zinc plated mild steel. Load capacities of 50kg to 250kg and a maximum tilt angle of 25 degrees from perpendicular give good positioning flexibility.

Base Size (mm)	Stem Size (mm)	Load Cap. (kg)	Catalogue Reference
40	M8 X 25	100	GL40 X M8 X 25
47.5	M10 X 38	250	GL47.5 X M10 X 37.5

Threaded Inserts

Suitable for use with Glides or twin wheeled furniture castors. Made of plastic construction, these are not suitable for shock loads.

To fit Square Tube INTERNAL Dimension (ins/mm)	Thread Size (mm)	Load Cap. (kg)	Catalogue Reference
7/8" / 22	M8	100	460907
7/8" / 22	M10	250	460909

V Series Light Duty - Top Plate Fitting

A range of light duty general purpose castors with top plate fittings

Wheel Dia. (mm)	Tread Width (mm)	Load Cap. (kg)	Overall Height (mm)	Plate / Bolt Hole Dimentions		Suits Bolt Dia (mm)	Wheel Type	Bearing Type	Catalogue Reference		
				Plate	Bolt Ctrs				Swivel	Braked	Fixed
Top Plate Fitting Castors											
50	18	50	72	50 X 50	36 X 36	6	White Polypropylene	Plain	LSV050PP	LSV050PPBR	n/a
50	18	50	72	50 X 50	36 X 36	6	Grey Rubber Tyred	Plain	LSV050RP	LSV050RPBR	n/a
75	25	70	95	75 X 60	55 X 42	8	White Polypropylene	Plain	LSV075PP	LSV075PPBR	LFV075PP
75	25	70	95	75 X 60	55 X 42	8	Grey Rubber Tyred	Plain	LSV075RP	LSV075RPBR	LFV075RP
75	22	50	95	75 X 60	55 X 42	8	Black Rubber Tyred	Roller	LSV075RMB	LSV075RMBBR	LFV075RMB
100	30	125	128	102 x 84	80 x 60	8	White Polypropylene	Plain	LSV100PP	LSV100PPBR	LFV100PP
100	24	70	128	102 X 84	80 X 60	8	Grey Rubber Tyred	Roller	LSV100RP	LSV100RPBR	LFV100RP
100	24	70	128	102 X 84	80 X 60	8	Black Rubber Tyred	Roller	LSV100RMB	LSV100RMBBR	LFV100RMB
125	37	160	155	102 x 84	80 x 60	8	White Polypropylene	Plain	LSV125PP	LSV125PPBR	LFV125PP
125	24	100	155	102 X 84	80 X 60	8	Grey Rubber Tyred	Roller	LSV125RP	LSV125RPBR	LFV125RP
125	24	100	155	102 X 84	80 X 60	8	Black Rubber Tyred	Roller	LSV125RMB	LSV125RMBBR	LFV125RMB
160	40	200	190	135 X 110	105 X 80	10	White Polypropylene	Plain	LSV160PP	LSV160PPBR	LFV160PP
160	22	160	190	135 X 110	105 X 80	10	Grey Rubber Tyred	Plain	LSV160RP	LSV160RPBR	LFV160RP
160	22	160	190	135 X 110	105 X 80	10	Black Rubber Tyred	Roller	LSV160RMB	LSV160RMBBR	LFV160RMB
200	40	250	235	135 X 110	105 X 80	10	White Polypropylene	Plain	LSV200PP	LSV200PPBR	LFV200PP
200	30	205	235	135 X 110	105 X 80	10	Grey Rubber Tyred	Plain	LSV200RP	LSV200RPBR	LFV200RP
200	30	205	235	135 X 110	105 X 80	10	Black Rubber Tyred	Roller	LSV200RMB	LSV200RMBBR	LFV200RMB

available with the following wheels

Technical Sales: Tel: 0115 9786 004 Fax: 0115 9422919

Sales@reidsofnottingham.co.uk www.reidsofnottingham.co.uk

V Series Light Duty - Bolt Hole Fitting

A range of light duty general purpose castors offering single bolt hole fittings.

Wheel Dia. (mm)	Tread Width (mm)	Load Cap. (kg)	Overall Height (mm)	Plate / Bolt Hole Dimensions (mm)		Suits Bolt Dia (mm)	Wheel Type	Bearing Type	Catalogue Reference		
				Plate	Bolt Ctrs				Swivel	Braked	Fixed
Bolt Hole Fitting Castors											
50	20	50	72	n/a	n/a	10	White Polypropylene	Plain	LSV050PPBH	LSV050PPBHBR	n/a
50	18	50	72	n/a	n/a	10	Grey Rubber Tyred	Plain	LSV050RPBH	LSV050RPBHBR	n/a
75	20	70	100	n/a	n/a	10	White Polypropylene	Plain	LSV075PPBH	LSV075PPBHBR	n/a
75	21	70	100	n/a	n/a	10	Grey Rubber Tyred	Plain	LSV075RPBH	LSV075RPBHBR	n/a
100	20	80	135	n/a	n/a	12	White Polypropylene	Plain	LSV100PPBH	LSV100PPBHBR	n/a
100	27	80	135	n/a	n/a	12	Grey Rubber Tyred	Plain	LSV100RPBH	LSV100RPBHBR	n/a
125	35	125	155	n/a	n/a	12	White Polypropylene	Plain	LSV125PPBH	LSV125PPBHBR	n/a
125	27	100	155	n/a	n/a	12	Grey Rubber Tyred	Plain	LSV125RPBH	LSV125RPBHBR	n/a

Available with the following wheels

Expander Fittings

This range of Nylon fittings allow castors to be fitted to hollow tube constructed equipment and furniture. Available loose or factory fitted to your choice of castor.

Tube Size (Internal mm)		Catalogue Reference	
Min	Max	Round	Square
19	21.5	WR07 19/21.5	n/a
21.5	24	WR07 21.5/24	WR47 21.5/24
24	27	WR07 24/27	WR47 24/27
27	30	WR07 27/30	WR47 27/30
31	35	WR07 31/35	n/a
32	35	n/a	WR47 32/35
36	40	n/a	WR47 36/40

Round

Square

Twin Wheeled Castors

Twin wheel, zinc - plated, pressed steel housing with sealed double ball race swivelhead.
Available with top plate or single bolthole fixing.

Wheel Dia. (mm)	Tread Width (mm)	Load Cap. (kg)	Overall Height (mm)	Plate / Bolt Hole Dimensions (mm)		Suits Bolt Dia (mm)	Wheel Type	Bearing Type	Catalogue Reference		
				Plate	Bolt Ctrs				Swivel	Braked	Fixed
TOP PLATE FITTING CASTORS											
50	18 x 2	55	73	55 x 55	42 x 42	6	Grey Rubber Tyre	Plain	2BZD50GR	2BZD50GRSWB	-
50	17 x 2	60	73	55 x 55	42 x 42	6	Black Polypropylene	Plain	2BZD50PL	2BZD50PLSWB	-
50	18 x 2	55	73	55 x 55	42 x 42	6	Grey Thermoplastic Rubber	Plain	2BZD50VGR	2BZD50VGRSWB	-
50	18 x 2	55	73	55 x 55	42 x 42	6	Grey Thermoplastic Rubber	Ball Journal	2BZD50VGRJ	2BZD50VGRSWBJ	-
75	21 x 2	90	103	67 x 77	56 x 61	8	Grey Rubber Tyre	Plain	2BZD75GR	2BZD75GRSWB	-
75	25 x 2	90	103	67 x 77	56 x 61	8	Black Polypropylene	Plain	2BZD75PL	2BZD75PLSWB	-
75	21 x 2	90	103	67 x 77	56 x 61	8	Grey Thermoplastic Rubber	Plain	2BZD75VGR	2BZD75VGRSWB	-
75	21 x 2	90	103	67 x 77	56 x 61	8	Grey Thermoplastic Rubber	Ball Journal	2BZD75VGRJ	2BZD75VGRSWBJ	-
SINGLE HOLE FITTING CASTORS											
50	18 x 2	55	73	-	-	10	Grey Rubber Tyre	Plain	2BZD50GRBH	2BZD50GRBHSWB	-
50	17 x 2	60	73	-	-	10	Black Polypropylene	Plain	2BZD50PLBH	2BZD50PLBHSWB	-
50	18 x 2	55	73	-	-	10	Grey Thermoplastic Rubber	Plain	2BZD50VGRBH	2BZD50VGRBHSWB	-
50	18 x 2	55	73	-	-	10	Grey Thermoplastic Rubber	Ball Journal	2BZD50VGRJBH	2BZD50VGRJBHSWB	-
75	21 x 2	90	103	-	-	12	Grey Rubber Tyre	Plain	2BZD75GRBH	2BZD75GRBHSWB	-
75	25 x 2	90	103	-	-	12	Black Polypropylene	Plain	2BZD75PLBH	2BZD75PLBHSWB	-
75	21 x 2	90	103	-	-	12	Grey Thermoplastic Rubber	Plain	2BZD75VGRBH	2BZD75VGRBHSWB	-
75	21 x 2	90	103	-	-	12	Grey Thermoplastic Rubber	Ball Journal	2BZD75VGRJBH	2BZD75VGRJBHSWB	-

Technical Sales: **Tel: 0115 9786 004** **Fax: 0115 9422919**

Sales@reidsofnottingham.co.uk **www.reidsofnottingham.co.uk**

Stainless Steel Castors

A range of stainless steel castors with double ball race heads for use in enviroments where there is a high level of moisture present or where hygiene requirements demand frequent washing

Wheel Dia. (mm)	Tread Width (mm)	Load Cap. (kg)	Overall Height (mm)	Plate / Bolt Hole Dimensions (mm)		Suits Bolt Dia. (mm)	Wheel Type	Bearing Type	Swivel Radius (mm)	Catalogue Reference		
				Swivel Plate Fixed Plate	Hole Size / Ctrs					Swivel	Swivel Braked	Fixed
Top Plate Fitting Castors												
80	34	100	108	105 X 85	80 x 60	9	Nylon	Plain	80	SS080NY	SS080NYSWB	SSF080NY
80	30	150	108	105 X 85	80 x 60	9	Polyurethane Tyre / Nylon Centre	Roller	80	SS080PNB	SS080PNBSWB	SSF080PNB
100	35	150	128	105 X 85	80 x 60	9	Nylon	Plain	90	SS100NY	SS100NYSWB	SSF100NY
100	30	150	128	105 X 85	80 x 60	9	Polyurethane Tyre / Nylon Centre	Roller	90	SS100PNB	SS100PNBSWB	SSF100PNB
100	30	150	128	105 X 85	80 x 60	9	Elastic Rubber Tyre / Nylon Centre	Roller	107.5	SS100RNB	SS100RNBSWB	SSF100RNB
125	40	300	155	105 X 85	80 x 60	9	Nylon	Plain	107.5	SS125NY	SS125NYSWB	SSF125NY
125	40	200	155	105 X 85	80 x 60	9	Polyurethane Tyre / Nylon Centre	Roller	107.5	SS125PNB	SS125PNBSWB	SSF125PNB
125	40	250	155	105 X 85	80 x 60	9	Elastic Rubber Tyre / Nylon Centre	Roller	107.5	SS125RNB	SS125RNBSWB	SSF125RNB
160	40	350	196	140 X 110	105 x 80/75	11	Nylon	Plain	140	SS160NY	SS160NYSWB	SSF160NY
160	40	350	196	140 X 110	105 x 80/75	11	Polyurethane Tyre / Nylon Centre	Roller	140	SS160PNB	SS160PNBSWB	SSF160PNB
160	46	300	196	140 X 110	105 x 80/75	11	Elastic Rubber Tyre / Nylon Centre	Roller	140	SS160RNB	SS160RNBSWB	SSF160RNB
200	46	400	236	140 X 110	105 x 80/75	11	Nylon	Plain	160	SS200NY	SS200NYSWB	SSF200NY
200	50	400	236	140 X 110	105 x 80/75	11	Polyurethane Tyre / Nylon Centre	Roller	160	SS200PNB	SS200PNBSWB	SSF200PNB
200	46	300	236	140 X 110	105 x 80/75	11	Elastic Rubber Tyre / Nylon Centre	Roller	160	SS200RNB	SS200RNBSWB	SSF200RNB
Bolt Hole Fitting Castors												
80	34	100	108	-	13	12	Nylon	Plain	80	SS080NYBH	SS080NYBHSWB	SSF080NYBH
80	30	100	108	-	13	12	Polyurethane Tyre / Nylon Centre	Roller	80	SS080PNBBH	SS080PNBBHSWB	SSF080PNBBH
100	35	150	128	-	13	12	Nylon	Plain	90	SS100NYBH	SS100NYBHSWB	SSF100NYBH
100	30	150	128	-	13	12	Polyurethane Tyre / Nylon Centre	Roller	90	SS100PNBBH	SS100PNBBHSWB	SSF100PNBBH
100	34	150	128	-	13	12	Elastic Rubber Tyre / Nylon Centre	Roller	90	SS100RNBBH	SS100RNBBHSWB	SSF100RNBBH
125	40	150	155	-	13	12	Nylon	Plain	107.5	SS125NYBH	SS125NYBHSWB	SSF125NYBH
125	30	150	155	-	13	12	Polyurethane Tyre / Nylon Centre	Roller	107.5	SS125PNBBH	SS125PNBBHSWB	SSF125PNBBH
125	40	250	155	-	13	12	Elastic Rubber Tyre / Nylon Centre	Roller	107.5	SS125RNBBH	SS125RNBBHSWB	SSF125RNBBH

Available with the following wheels

LI Series castors

A range of top plate fitting pressed steel castors with double ball race swivel heads, suitable for a wide variety of industrial uses.

Wheel Dia. (mm)	Tread Width (mm)	Load Cap. (kg)	Overall Height (mm)	Plate / Bolt Hole Dimensions		Suit Bolt Dia. (mm)	Wheel Type	Bearing Type	Swivel Radius (mm)	Catalogue Reference		
				Swivel Plate Fixed Plate	Hole Size / Ctrs					Swivel	Swivel Braked	Fixed
Top Plate Fitting Castors												
80	34	200	108	Swivel 105 X 85 Fixed 103 X 85	80/77 X 60	9	Nylon	Plain	84.5	LI080NY	LI080NYSWB	BI080NY
80	35	70	108		80/77 X 60	9	Rubber Tyre / Poly Centre	Roller	84.5	LI080RNB	LI080RNBSWB	BI080RNB
80	30	150	108		80/77 X 60	9	Poly Tyre / Nylon Centre	Plain	84.5	LI080PNB	LI080PNBSWB	BI080PNB
100	36	200	128	Swivel 105 X 85 Fixed 103 X 85	80/77 X 60	9	Nylon	Roller	91	LI100NYB	LI100NYBSWB	BI100NYB
100	34	150	128		80/77 X 60	9	Blue Elastic Rubber	Roller	91	LI100RNB	LI100RNBSWB	BI100RNB
100	30	70	128		80/77 X 60	9	Rubber Tyre / Metal Centre	Roller	91	LI100BSB	LI100BSBSWB	BI100BSB
100	35	75	128		80/77 X 60	9	Rubber Tyre / Poly Centre	Roller	91	LI100PSB	LI100PSBSWB	BI100PSB
100	30	150	128		80/77 X 60	9	Poly Tyre / Nylon Centre	Roller	91	LI100PNB	LI100PNBSWB	BI100PNB
125	40	250	155	Swivel 105 X 85 Fixed 103 X 85	80/77 X 60	9	Nylon	Roller	102.5	LI125NYB	LI125NYBSWB	BI125NYB
125	40	250	155		80/77 X 60	9	Blue Elastic Rubber	Roller	102.5	LI125RNB	LI125RNBSWB	BI125RNB
125	37	100	155		80/77 X 60	9	Rubber Tyre / Metal Centre	Roller	102.5	LI125BSB	LI125BSBSWB	BI125BSB
125	37	100	155		80/77 X 60	9	Rubber Tyre / Poly Centre	Roller	102.5	LI125PSB	LI125PSBSWB	BI125PSB
125	32	200	155		80/77 X 60	9	Poly Tyre / Nylon Centre	Roller	102.5	LI125PNB	LI125PNBSWB	BI125PNB
160	40	350	200	Swivel 137 X 105 Fixed 137 X 115	105 X 80	11	Nylon	Roller	135	LI160NYB	LI160NYBSWB	BI160NYB
160	46	300	200		105 X 80	11	Grey Elastic Rubber	Roller	135	LI160RNB(GREY)	LI160RNBSWB	BI160RNB (GREY)
160	40	135	200		105 X 80	11	Rubber Tyre / Metal Centre	Roller	135	LI160BSB	LI160BSBSWB	BI160BSB
160	40	135	200		105 X 80	11	Rubber Tyre / Poly Centre	Roller	135	LI160PSB	LI160PSBSWB	BI160PSB
160	40	350	200		105 X 80	11	Poly Tyre / Nylon Centre	Roller	135	LI160PNB	LI160PNBSWB	BI160PNB
200	50	350	240	Swivel 137 X 105 Fixed 137 X 115	105 X 80	11	Nylon	Roller	155	LI200NYB	LI200NYBSWB	BI200NYB
200	46	400	240		105 X 80	11	Grey Elastic Rubber	Roller	155	LI200RNB(GREY)	LI200RNBSWB	BI200RNB (GREY)
200	50	205	240		105 X 80	11	Rubber Tyre / Metal Centre	Roller	155	LI200BSB	LI200BSBSWB	BI200BSB
200	50	205	240		105 X 80	11	Rubber Tyre / Poly Centre	Roller	155	LI200PSB	LI200PSBSWB	BI200PSB
200	50	350	240		105 X 80	11	Poly Tyre / Nylon Centre	Roller	155	LI200PNB	LI200PNBSWB	BI200PNB

Available with the following wheels

LI Series castors

A range of bolt hole fitting pressed steel castors with double ball race swivel heads, suitable for a wide variety of industrial uses.

A range of expanders for round or square tube sections is available to fit.

Wheel Dia. (mm)	Tread Width (mm)	Load Cap. (kg)	Overall Height (mm)	Suits Bolt Dia. (mm)	Wheel Type	Bearing Type	Swivel Radius (mm)	Catalogue Reference		
								Swivel	Swivel Braked	Fixed
80	34	150	108	13	Nylon	Plain	84.5	LI080NYBH	LI080NYBHSWB	n/a
80	35	70	108	13	Rubber Tyre / Poly Centre	Roller	84.5	LI080PSBBH	LI080PSBBHSWB	n/a
80	30	100	108	13	Poly Tyre / Nylon Centre	Plain	84.5	LI080PNBH	LI080PNBHSWB	n/a
100	36	150	128	13	Nylon	Roller	91	LI100NYBBH	LI100NYBBHSWB	n/a
100	34	150	128	13	Blue Elastic Rubber	Roller	91	LI100RNBBH	LI100RNBBHSWB	n/a
100	30	70	128	13	Rubber Tyre / Metal Centre	Roller	91	LI100BSBBH	LI100BSBBHSWB	n/a
100	35	75	128	13	Rubber Tyre / Poly Centre	Roller	91	LI100PSBBH	LI100PSBBHSWB	n/a
100	30	150	128	13	Poly Tyre / Nylon Centre	Roller	91	LI100PNBBH	LI100PNBBHSWB	n/a
125	40	150	155	13	Nylon	Roller	102.5	LI125NYBBH	LI125NYBBHSWB	n/a
125	40	150	155	13	Blue Elastic Rubber	Roller	102.5	LI125RNBBH	LI125RNBBHSWB	n/a
125	37	100	155	13	Rubber Tyre / Metal Centre	Roller	102.5	LI125BSBBH	LI125BSBBHSWB	n/a
125	37	100	155	13	Rubber Tyre / Poly Centre	Roller	102.5	LI125PSBBH	LI125PSBBHSWB	n/a
125	30	150	155	13	Poly Tyre / Nylon Centre	Roller	102.5	LI125PNBBH	LI125PNBBHSWB	n/a
160	40	200	195	13	Nylon	Roller	135	LI160NYBBH	LI160NYBBHSWB	n/a
160	46	200	195	13	Grey Elastic Rubber	Roller	135	LI160RNBBH	LI160RNBBHSWB	n/a
160	40	135	195	13	Rubber Tyre / Metal Centre	Roller	135	LI160BSBBH	LI160BSBBHSWB	n/a
160	40	135	195	13	Rubber Tyre / Poly Centre	Roller	135	LI160PSBBH	LI160PSBBHSWB	n/a
160	40	200	195	13	Poly Tyre / Nylon Centre	Roller	135	LI160PNBBH	LI160PNBBHSWB	n/a
200	50	200	235	13	Nylon	Roller	155	LI200NYBBH	LI200NYBBHSWB	n/a
200	46	200	235	13	Grey Elastic Rubber	Roller	155	LI200RNBBH	LI200RNBBHSWB	n/a
200	50	200	235	13	Rubber Tyre / Metal Centre	Roller	155	LI200BSBBH	LI200BSBBHSWB	n/a
200	50	200	235	13	Rubber Tyre / Poly Centre	Roller	155	LI200RNBBH	LI200RNBBHSWB	n/a
200	50	200	235	13	Poly Tyre / Nylon Centre	Roller	155	LI200PNBBH	LI200PNBBHSWB	n/a

Available with the following wheels

22 & 29 Series

A range adaptable medium duty 100mm and 125mm pressed steel castors in bright zinc finish. Double ball race heads that offer an easy swivel action and durability.

The polyurethane tyre, nylon centre configuration with a roller bearing is recommended for most applications and a wide selection of other wheel types makes this range ideal for general industrial uses.

Wheel Dia. (mm)	Tread Width (mm)	Load Cap. (kg)	Overall Height (mm)	Plate / Bolt Hole Dimensions (mm)		Suits Bolt Dia (mm)	Wheel Type	Bearing Type	Swivel Radius (mm)	Catalogue Reference		
				Plate	Hole Ctrs					Swivel	Swivel & Wheel Brake	Fixed
100	43	250	128	S 105 x 86 F 105 x 88	80 x 60	8	Polyurethane Tyre / Cast Iron Centre	Roller	90	422SUB	-	429SUB
100	32	250	128	S 105 x 86 F 105 x 88	80 x 60	8	Nylon	Plain	90	422NY	422NYSWB	429NY
100	32	250	128	S 105 x 86 F 105 x 88	80 x 60	8	Nylon	Roller	90	422NYB	422NYBSWB	429NYB
100	35	250	128	S 105 x 86 F 105 x 88	80 x 60	8	Polyurethane Tyre / Nylon Centre	Plain	90	422PN	422PNSWB	429PN
100	35	250	128	S 105 x 86 F 105 x 88	80 x 60	8	Polyurethane Tyre / Nylon Centre	Roller	90	422PNB	422PNBSWB	429PNB
100	38	160	128	S 105 x 86 F 105 x 88	80 x 60	8	Blue Rubber Tyre / Nylon Centre	Plain	90	422RN	422RNSWB	429RN
100	38	160	128	S 105 x 86 F 105 x 88	80 x 60	8	Blue Rubber Tyre / Nylon Centre	Roller	90	422RNB	422RNBSWB	429RNB
125	38	180	155	S 105 x 86 F 105 x 88	80 x 60	8	Rubber Tyre / Cast Iron Centre	Plain	105	522RT	522RTSWB	529RT
125	38	180	155	S 105 x 86 F 105 x 88	80 x 60	8	Rubber Tyre / Cast Iron Centre	Roller	105	522RTB	522RTBSWB	529RTB
125	35	250	155	S 105 x 86 F 105 x 88	80 x 60	8	Polyurethane Tyre / Cast Iron Centre	Roller	105	522SUB	522SUBSWB	529SUB
125	35	250	155	S 105 x 86 F 105 x 88	80 x 60	8	Nylon	Plain	105	522NY	522NYSWB	529NY
125	35	250	155	S 105 x 86 F 105 x 88	80 x 60	8	Nylon	Roller	105	522NYB	522NYBSWB	529NYB
125	35	250	155	S 105 x 86 F 105 x 88	80 x 60	8	Polyurethane Tyre / Nylon Centre	Plain	105	522PN	522PNSWB	529PN
125	35	250	155	S 105 x 86 F 105 x 88	80 x 60	8	Polyurethane Tyre / Nylon Centre	Roller	105	522PNB	522PNBSWB	529PNB
125	38	180	155	S 105 x 86 F 105 x 88	80 x 60	8	Blue Rubber Tyre / Nylon Centre	Plain	105	522RN	522RNSWB	529RN
125	38	180	155	S 105 x 86 F 105 x 88	80 x 60	8	Blue Rubber Tyre / Nylon Centre	Roller	105	522RNB	522RNBSWB	529RNB

THREADED STEM & NUT FITTING
Available on 100mm Swivel castors with NY and RN wheel types. Stem is M16 x 30mm. Fitting height is 123mm.
Add suffix **'ST'** to catalogue reference when ordering.

SWIVEL RADIUS INCREASES ON BRAKED CASTORS
Swivel radius increases by 40mm on 100mm castors and by 25mm on 125mm castors.

BOLT HOLE FITTING
Available on 100mm and 125mm castors only.
Fitting is suitable for 12mm Dia. bolt.
Note: Load ratings are reduced to a maximum of 200Kg depending on wheel type. Fitting height is 5mm lower than top plate fitting castors.
Add suffix **'BH12'** to catalogue reference when ordering.

Available with the following wheel types

22 & 29 Series Castors

A range of adaptable medium duty 100mm and 150mm pressed steel castors with double ball race heads and bright zinc finish.

A wide selection of wheel types makes this range ideal for general industrial uses.

Wheel Dia. (mm)	Tread Width (mm)	Load Cap. (kg)	Overall Height (mm)	Plate / Bolt Hole Dimensions (mm)		Suits Bolt Dia (mm)	Wheel Type	Bearing Type	Swivel Radius (mm)	Catalogue Reference		
				Plate	Hole Ctrs					Swivel	Swivel & Wheel Brake	Fixed
150	38	500	188	S 135 x 110 F 135 x 115	105 x 80/75	10	Polyurethane Tyre / Cast Iron Centre	Roller	128	622SUB	622SUBSWB	629SUB
150	38	500	188	S 135 x 110 F 135 x 115	105 x 80/75	10	Nylon	Plain	128	622NY	622NYSWB	629NY
150	38	500	188	S 135 x 110 F 135 x 115	105 x 80/75	10	Nylon	Roller	128	622NYB	622NYBSWB	629NYB
150	45	500	188	S 135 x 110 F 135 x 115	105 x 80/75	10	Polyurethane Tyre / Nylon Centre	Plain	128	622PN	622PNSWB	629PN
150	45	500	188	S 135 x 110 F 135 x 115	105 x 80/75	10	Polyurethane Tyre / Nylon Centre	Roller	128	622PNB	622PNBSWB	629PNB
150	45	300	188	S 135 x 110 F 135 x 115	105 x 80/75	10	Blue Rubber Tyre / Nylon Centre	Plain	128	622RN	622RNSWB	629RN
150	45	300	188	S 135 x 110 F 135 x 115	105 x 80/75	10	Blue Rubber Tyre / Nylon Centre	Roller	128	622RNB	622RNBSWB	629RNB
150	38	135	188	S 135 x 110 F 135 x 115	105 x 80/75	10	Rubber Tyre / Plastic Centre	Plain	128	622PS	622PSSWB	629PS
150	38	135	188	S 135 x 110 F 135 x 115	105 x 80/75	10	Rubber Tyre / Plastic Centre	Roller	128	622PSB	622PSBSWB	629PSB
200	50	500	238	S 135 x 110 F 135 x 115	105 x 80/75	10	Polyurethane Tyre / Cast Iron Centre	Roller	153	822SUB	822SUBSWB	829SUB
200	38	500	238	S 135 x 110 F 135 x 115	105 x 80/75	10	Nylon	Plain	153	822NY	822NYSWB	829NY
200	38	500	238	S 135 x 110 F 135 x 115	105 x 80/75	10	Nylon	Roller	153	822NYB	822NYBSWB	829NYB
200	50	500	238	S 135 x 110 F 135 x 115	105 x 80/75	10	Polyurethane Tyre / Nylon Centre	Plain	153	822PN	822PNSWB	829PN
200	50	500	238	S 135 x 110 F 135 x 115	105 x 80/75	10	Polyurethane Tyre / Nylon Centre	Roller	153	822PNB	822PNBSWB	829PNB
200	50	450	238	S 135 x 110 F 135 x 115	105 x 80/75	10	Blue Rubber Tyre / Nylon Centre	Plain	153	822RN	822RNSWB	829RN
200	50	450	238	S 135 x 110 F 135 x 115	105 x 80/75	10	Blue Rubber Tyre / Nylon Centre	Roller	153	822RNB	822RNBSWB	829RNB
200	50	205	238	S 135 x 110 F 135 x 115	105 x 80/75	10	Rubber Tyre / Plastic Centre	Plain	153	822PS	822PSSWB	829PS
200	50	205	238	S 135 x 110 F 135 x 115	105 x 80/75	10	Rubber Tyre / Plastic Centre	Roller	153	822PSB	822PSBSWB	829PSB

SWIVEL RADIUS INCREASES ON BRAKED CASTORS
Swivel radius increases by 33mm on 150mm castors and by 12mm on 200mm castors.

Available with the following wheels

61 & 88 Series

An established industry standard range of pressed steel castors offering a wide range of fitting and wheel options.
Suitable for most industrial uses.

Wheel Dia. (mm)	Tread Width (mm)	Load Cap. (kg)	Overall Height (mm)	Plate / Bolt Hole Dimensions (mm)		Suits Bolt Dia (mm)	Wheel Type	Bearing Type	Swivel Radius (mm)	Catalogue Reference		
				Plate	Hole Ctrs					Swivel	Foot Brake	Fixed
50	19	54	64	S 67 x 48 F 67 x 45	54 x 25	6	Nylon	Plain	42	961NY	-	988NY
50	22	27	64	S 67 x 48 F 67 x 45	54 x 25	6	Rubber Tyre / Nylon Centre	Plain	42	961RN	-	988RN
50	22	54	64	S 67 x 48 F 67 x 45	54 x 25	6	Cast Iron	Plain	42	961CI	-	988CI
63	22	122	81	S 95 x 70 F 95 x 59	S 76 x 44.5 F 76 x 35	8	Nylon	Plain	54	261NY	-	288NY
63	25	60	81	S 95 x 70 F 95 x 59	S 76 x 44.5 F 76 x 35	8	Rubber Tyre / Nylon Centre	Plain	54	261RN	-	288RN
63	25	122	81	S 95 x 70 F 95 x 59	S 76 x 44.5 F 76 x 35	8	Cast Iron	Plain	54	261CI	-	288CI
75	29	150	95	S 105 x 80 F 102 x 64	S 80/86 x 60 F 83 x 35	8	Polyurethane Tyre / Cast Iron Centre	Plain	62	361SU	361SUBR	388SU
75	25	170	95	S 105 x 80 F 102 x 64	S 80/86 x 60 F 83 x 35	8	Nylon	Plain	62	361NY	361NYBR	388NY
75	32	90	95	S 105 x 80 F 102 x 64	S 80/86 x 60 F 83 x 35	8	Rubber Tyre / Nylon Centre	Plain	62	361RN	361RNBR	388RN
75	32	170	95	S 105 x 80 F 102 x 64	S 80/86 x 60 F 83 x 35	8	Cast Iron	Plain	62	361CI	361CIBR	388CI
75	38	150	95	S 105 x 80 F 102 x 64	S 80/86 x 60 F 83 x 35	8	Phenolic Resin	Plain	62	361AN	361ANBR	388AN
100	43	295	125	S 128 x 102 F 121 x 80	S 100/105 x 76/80 F 100 x 48	10	Polyurethane Tyre / Cast Iron Centre	Roller	76	461SUB	461SUBBR	488SUB
100	32	270	125	S 128 x 102 F 121 x 80	S 100/105 x 76/80 F 100 x 48	10	Nylon	Plain	76	461NY	461NYBR	488NY
100	32	270	125	S 128 x 102 F 121 x 80	S 100/105 x 76/80 F 100 x 48	10	Nylon	Roller	76	461NYB	461NYBBR	488NYB
100	35	250	125	S 128 x 102 F 121 x 80	S 100/105 x 76/80 F 100 x 48	10	Polyurethane Tyre / Nylon Centre	Plain	76	461PN	461PNBR	488PN
100	35	250	125	S 128 x 102 F 121 x 80	S 100/105 x 76/80 F 100 x 48	10	Polyurethane Tyre / Nylon Centre	Roller	76	461PNB	461PNBBR	488PNB
100	38	160	125	S 128 x 102 F 121 x 80	S 100/105 x 76/80 F 100 x 48	10	Rubber Tyre / Nylon Centre	Plain	76	461RN	461RNBR	488RN
100	38	160	125	S 128 x 102 F 121 x 80	S 100/105 x 76/80 F 100 x 48	10	Rubber Tyre / Nylon Centre	Roller	76	461RNB	461RNBBR	488RNB
100	38	340	125	S 128 x 102 F 121 x 80	S 100/105 x 76/80 F 100 x 48	10	Cast Iron	Plain	76	461CI	461CIBR	488CI
100	38	340	125	S 128 x 102 F 121 x 80	S 100/105 x 76/80 F 100 x 48	10	Cast Iron	Roller	76	461CIB	461CIBBR	488CIB
100	38	305	125	S 128 x 102 F 121 x 80	S 100/105 x 76/80 F 100 x 48	10	Phenolic Resin	Plain	76	461AN	461ANBR	488AN
100	38	305	125	S 128 x 102 F 121 x 80	S 100/105 x 76/80 F 100 x 48	10	Phenolic Resin	Roller	76	461ANB	461ANBBR	488ANB

THREADED STEM & NUT FITTING Available on 63mm and 75mm castors. Stem is M12 x 25mm.
Add suffix **'ST'** to catalogue reference when ordering.

TRIANGULAR PLATE FITTING Available on 63 - 100mm castors. Fitting Ctrs 73-102mm on 63/75mm castors, 96-114mm on 100mm castors. Add suffix **'V'** to catalogue reference when ordering.

Available with the following wheels

61 & 88 Series

An established industry standard range of pressed steel castors offering a wide range of fitting and wheel options.

Suitable for most industrial uses,

< Threadguards available on Nylon wheel castors over 63mm

Wheel Dia. (mm)	Tread Width (mm)	Load Cap. (kg)	Overall Height (mm)	Plate / Bolt Hole Dimensions (mm)		Suits Bolt Dia (mm)	Wheel Type	Bearing Type	Swivel Radius (mm)	Catalogue Reference		
				Plate	Hole Ctrs					Swivel	Foot Brake	Fixed
125	38	180	156	S 162 x 133 F 121 x 80	S 140/120 x 105/95 F 100 x 48	10	Rubber Tyre / Cast Iron Centre	Plain	98	561RT	-	588RT
125	38	180	156	S 162 x 133 F 121 x 80	S 140/120 x 105/95 F 100 x 48	10	Rubber Tyre / Cast Iron Centre	Roller	98	561RTB	-	588RTB
125	35	325	156	S 162 x 133 F 121 x 80	S 140/120 x 105/95 F 100 x 48	10	Polyurethane Tyre / Cast Iron Centre	Roller	98	561SUB	-	588SUB
125	35	365	156	S 162 x 133 F 121 x 80	S 140/120 x 105/95 F 100 x 48	10	Nylon	Plain	98	561NY	-	588NY
125	35	365	156	S 162 x 133 F 121 x 80	S 140/120 x 105/95 F 100 x 48	10	Nylon	Roller	98	561NYB	-	588NYB
125	35	300	156	S 162 x 133 F 121 x 80	S 140/120 x 105/95 F 100 x 48	10	Polyurethane Tyre / Nylon Centre	Plain	98	561PN	-	588PN
125	35	300	156	S 162 x 133 F 121 x 80	S 140/120 x 105/95 F 100 x 48	10	Polyurethane Tyre / Nylon Centre	Roller	98	561PNB	-	588PNB
125	38	180	156	S 162 x 133 F 121 x 80	S 140/120 x 105/95 F 100 x 48	10	Rubber Tyre / Nylon Centre	Plain	98	561RN	-	588RN
125	38	180	156	S 162 x 133 F 121 x 80	S 140/120 x 105/95 F 100 x 48	10	Rubber Tyre / Nylon Centre	Roller	98	561RNB	-	588RNB
125	41	475	156	S 162 x 133 F 121 x 80	S 140/120 x 105/95 F 100 x 48	10	Cast Iron	Plain	98	561CI	-	588CI
125	41	475	156	S 162 x 133 F 121 x 80	S 140/120 x 105/95 F 100 x 48	10	Cast Iron	Roller	98	561CIB	-	588CIB
125	38	395	156	S 162 x 133 F 121 x 80	S 140/120 x 105/95 F 100 x 48	10	Phenolic Resin	Plain	98	561AN	-	588AN
125	38	395	156	S 162 x 133 F 121 x 80	S 140/120 x 105/95 F 100 x 48	10	Phenolic Resin	Roller	98	561ANB	-	588ANB
150	45	400	181	S 162 x 133 F 155 x 113	S 140/120 x 105/95 F 133 x 67	10	Rubber Tyre / Cast Iron Centre	Plain	117	661RT	-	688RT
150	45	400	181	S 162 x 133 F 155 x 113	S 140/120 x 105/95 F 133 x 67	10	Rubber Tyre / Cast Iron Centre	Roller	117	661RTB	-	688RTB
150	38	540	181	S 162 x 133 F 155 x 113	S 140/120 x 105/95 F 133 x 67	10	Polyurethane Tyre / Cast Iron Centre	Roller	117	661SUB	-	688SUB
150	38	520	181	S 162 x 133 F 155 x 113	S 140/120 x 105/95 F 133 x 67	10	Nylon	Plain	117	661NY	-	688NY
150	38	520	181	S 162 x 133 F 155 x 113	S 140/120 x 105/95 F 133 x 67	10	Nylon	Roller	117	661NYB	-	688NYB
150	45	600	181	S 162 x 133 F 155 x 113	S 140/120 x 105/95 F 133 x 67	10	Polyurethane Tyre / Nylon Centre	Plain	117	661PN	-	688PN
150	45	600	181	S 162 x 133 F 155 x 113	S 140/120 x 105/95 F 133 x 67	10	Polyurethane Tyre / Nylon Centre	Roller	117	661PNB	-	688PNB
150	45	300	181	S 162 x 133 F 155 x 113	S 140/120 x 105/95 F 133 x 67	10	Rubber Tyre / Nylon Centre	Plain	117	661RN	-	688RN
150	45	300	181	S 162 x 133 F 155 x 113	S 140/120 x 105/95 F 133 x 67	10	Rubber Tyre / Nylon Centre	Roller	117	661RNB	-	688RNB
150	45	680	181	S 162 x 133 F 155 x 113	S 140/120 x 105/95 F 133 x 67	10	Cast Iron	Plain	117	661CI	-	688CI
150	45	680	181	S 162 x 133 F 155 x 113	S 140/120 x 105/95 F 133 x 67	10	Cast Iron	Roller	117	661CIB	-	688CIB
150	51	540	181	S 162 x 133 F 155 x 113	S 140/120 x 105/95 F 133 x 67	10	Phenolic Resin	Plain	117	661AN	-	688AN
150	51	540	181	S 162 x 133 F 155 x 113	S 140/120 x 105/95 F 133 x 67	10	Phenolic Resin	Roller	117	661ANB	-	688ANB

Available with the following wheels

55 & 88 Series

A medium to heavy duty range of castors with heavy duty brackets, roller ball bearing swivel heads and pressed steel brackets.

Suitable for a wide selection of applications, this range has a bright zinc finish.

Wheel Dia. (mm)	Tread Width (mm)	Load Cap. (kg)	Overall Height (mm)	Plate / Bolt Hole Dimensions (mm)		Suits Bolt Dia (mm)	Wheel Type	Bearing Type	Swivel Radius (mm)	Catalogue Reference		
				Plate	Hole Ctrs					Swivel	Swivel & Wheel Brake	Fixed
150	45	400	197	S 162 x 140 F 165 x 112	S 140 x 105 F 140 x 73	10	Rubber Tyred Cast Iron	Plain	111	655RT	655RTSWB	688RT
150	45	400	197	S 162 x 140 F 165 x 112	S 140 x 105 F 140 x 73	10	Rubber Tyred Cast Iron	Roller	111	655RTB	655RTBSWB	688RTB
150	45	725	197	S 162 x 140 F 165 x 112	S 140 x 105 F 140 x 73	10	Polyurethane Tyred Cast Iron	Roller	111	655SUB	655SUBSWB	688SUB
150	38	520	197	S 162 x 140 F 165 x 112	S 140 x 105 F 140 x 73	10	Nylon	Plain	111	655NY	655NYSWB	688NY
150	38	520	197	S 162 x 140 F 165 x 112	S 140 x 105 F 140 x 73	10	Nylon	Roller	111	655NYB	655NYBSWB	688NYB
150	45	600	197	S 162 x 140 F 165 x 112	S 140 x 105 F 140 x 73	10	Polyurethane Tyred Nylon	Plain	111	655PN	655PNSWB	688PN
150	45	600	197	S 162 x 140 F 165 x 112	S 140 x 105 F 140 x 73	10	Polyurethane Tyred Nylon	Roller	111	655PNB	655PNBSWB	688PNB
150	45	1020	197	S 162 x 140 F 165 x 112	S 140 x 105 F 140 x 73	10	Cast Iron	Plain	111	655CI	-	688CI
150	45	1020	197	S 162 x 140 F 165 x 112	S 140 x 105 F 140 x 73	10	Cast Iron	Roller	111	655CIB	-	688CIB
200	51	585	246	S 162 x 140 F 165 x 112	S 140 x 105 F 140 x 73	10	Rubber Tyred Cast Iron	Plain	150	855RT	855RTSWB	888RT
200	51	585	246	S 162 x 140 F 165 x 112	S 140 x 105 F 140 x 73	10	Rubber Tyred Cast Iron	Roller	150	855RTB	855RTBSWB	888RTB
200	51	1045	246	S 162 x 140 F 165 x 112	S 140 x 105 F 140 x 73	10	Polyurethane Tyred Cast Iron	Roller	150	855SUB	855SUBSWB	888SUB
200	38	605	246	S 162 x 140 F 165 x 112	S 140 x 105 F 140 x 73	10	Nylon	Plain	150	855NY	855NYSWB	888NY
200	38	605	246	S 162 x 140 F 165 x 112	S 140 x 105 F 140 x 73	10	Nylon	Roller	150	855NYB	855NYBSWB	888NYB
200	50	650	246	S 162 x 140 F 165 x 112	S 140 x 105 F 140 x 73	10	Polyurethane Tyred Nylon	Plain	150	855PN	855PNSWB	888PN
200	50	650	246	S 162 x 140 F 165 x 112	S 140 x 105 F 140 x 73	10	Polyurethane Tyred Nylon	Roller	150	855PNB	855PNBSWB	888PNB
200	45	1090	246	S 162 x 140 F 165 x 112	S 140 x 105 F 140 x 73	10	Cast Iron	Plain	150	855CI	-	888CI
200	45	1090	246	S 162 x 140 F 165 x 112	S 140 x 105 F 140 x 73	10	Cast Iron	Roller	150	855CIB	-	888CIB

Castors with plain bearing type 'NY' wheels are also available with corrosion free wheel tubes for use in wet conditions. Add suffix 'SS' to the catalogue reference when ordering.

Elastic Rubber Tyred wheels are also available. Call sales for more information.

Available with the following wheels

BS5 & BF5 Series

A range of pressed steel castors with single ball race swivel heads and swivel seals fitted as standard.
Bolt Holes are suitable for 19mm diameter fixing bolts.
Suitable for heavier industrial uses, the range has load capacities of up to 600kg.

Wheel Dia. (mm)	Tread Width (mm)	Load Cap. (kg)	Overall Height (mm)	Suits Fitting Bolt Dia (mm)	Wheel Type	Bearing Type	Swivel Radius (mm)	Catalogue Reference			
								Swivel	Footbrake	Swivel & Wheel Brake	Fixed
150	45	370	200	19	Rubber Tyre / Cast Iron Centre	Plain	129	BS5150RU05	BS5150RU05H	BS5150RU05L	-
150	45	370	200	19	Rubber Tyre / Cast Iron Centre	Roller	129	BS5150RU15	BS5150RU15H	BS5150RU15L	-
150	40	500	200	19	Nylon	Plain	129	BS5150NY05	BS5150NY05H	BS5150NY05L	-
150	40	500	200	19	Nylon	Roller	129	BS5150NY15	BS5150NY15H	BS5150NY15L	-
150	50	600	200	19	Nylon	Ball Journal	129	BS5150NY2H	BS5150NY2HH	BS5150NY2HL	-
150	38	600	200	19	Polyurethane Tyre / Cast Iron Centre	Plain	129	BS5150PT05	BS5150PT05H	BS5150PT05L	-
150	38	600	200	19	Polyurethane Tyre / Cast Iron Centre	Roller	129	BS5150PT15	BS5150PT15H	BS5150PT15L	-
150	45	600	200	19	Cast Iron	Plain	129	BS5150CI05	BS5150CI05H	BS5150CI05L	-
150	45	600	200	19	Cast Iron	Roller	129	BS5150CI15	BS5150CI15H	BS5150CI15L	-
160	42	300	205	19	Elastic Rubber Tyre / Aluminium Centre	Ball Journal	134	BS5160GR2H	-	-	-
200	42	400	244	19	Elastic Rubber Tyre / Aluminium Centre	Ball Journal	154	BS5200GR2H	-	-	-
200	50	500	244	19	Rubber Tyre / Cast Iron Centre	Plain	154	BS5200RU05	-	BS5200RU05L	-
200	50	500	244	19	Rubber Tyre / Cast Iron Centre	Roller	154	BS5200RU15	BS5200RU15H	BS5200RU15L	-
200	50	500	244	19	Nylon	Plain	154	BS5200NY05	BS5200NY05H	BS5200NY05L	-
200	50	500	244	19	Nylon	Roller	154	BS5200NY15	BS5200NY15H	BS5200NY15L	-
200	50	400	244	19	Polyurethane Tyre / Nylon Centre	Plain	154	BS5200NT0E	BS5200NT0EH	BS5200NT0EL	-
200	50	600	244	19	Nylon	Ball Journal	154	BS5200NY2H	BS5200NY2HH	BS5200NY2HL	-
200	45	600	244	19	Polyurethane Tyre / Cast Iron Centre	Plain	154	BS5200PT05	BS5200PT05H	BS5200PT05L	-
200	45	600	244	19	Polyurethane Tyre / Cast Iron Centre	Roller	154	BS5200PT15	BS5200PT15H	BS5200PT15L	-
200	45	600	244	19	Cast Iron	Plain	154	BS5200CI05	BS5200CI05H	BS5200CI05L	-
200	45	600	244	19	Cast Iron	Roller	154	BS5200CI15	BS5200CI15H	BS5200CI15L	-

Wheel Lock
Available on 150mm and 200mm swivel castors.
A simple hand operated parking lock. To order add the suffix **W** to the swivel castor Catalogue reference.

Swivel Head Seals
Fitted as standard to all 5 Series castors to help prevent ingress of dirt or matter that may impair performance.

Threadguards
Available on all 5 Series castors except those with GR Elastic rubber wheels.
Add code **T** to the catalogue reference when ordering.

Available with the following wheels

46 Series Castors

A range of Top Plate fitting, pressed steel castors with sealed, double race swivel heads suitable for Heavy Duty industrial applications. A wide range of wheels can be used with these castors. Directional lock options are available.

To order a directional lock castor replace the first four digits of the order code with 4671

Wheel Dia. (mm)	Tread Width (mm)	Load Cap. (kg)	Overall Height (mm)	Plate / Bolt Hole Dimensions (mm)		Suits Bolt Dia (mm)	Wheel Type	Bearing Type	Swivel Radius (mm)	Catalogue Reference		
				Swivel Plate Fixed Plate	Hole Size / Ctrs					Swivel	Swivel Braked	Fixed
125	50	300	164	140 X 110	105 X 80	11	Elastic Rubber Tyre, Aluminium Ctr	Ball Journal	117.5	4670IEP125P63	4677IEP125P63	4678IEP125P63
125	40	330	164	140 X 110	105 X 80	11	Nylon	Plain	117.5	4670UOO125P63	4677UOO125P63	4678UOO125P63
125	50	550	164	140 X 110	105 X 80	11	Polyurethane Tyred Cast Iron Ctr	Ball Journal	117.5	4670FTP125P63	4677FTP125P63	4678FTP125P63
160	50	350	200	140 X 110	105 X 80	11	Elastic Rubber Tyre, Aluminium Ctr	Ball Journal	135	4670IEP160P63	4677IEP160P63	4678IEP160P63
160	40	500	200	140 X 110	105 X 80	11	Nylon	Plain	135	4670UOO160P63	4677UOO160P63	4678UOO160P63
160	50	800	200	140 X 110	105 X 80	11	Polyurethane Tyred Cast Iron Ctr	Ball Journal	135	4670FTP160P63	4677FTP160P63	4678FTP160P63
200	50	400	240	140 X 110	105 X 80	11	Elastic Rubber Tyre, Aluminium Ctr	Ball Journal	155	4670IEP200P63	4677IEP200P63	4678IEP200P63
200	50	800	240	140 X 110	105 X 80	11	Nylon	Plain	155	4670UOO200P63	4677UOO200P63	4678UOO200P63
200	50	800	240	140 X 110	105 X 80	11	Polyurethane Tyred Cast Iron Ctr	Ball Journal	155	4670FTP200P63	4677FTP200P63	4678FTP200P63
250	50	450	292	140 x 110	105 X 80	11	Elastic Rubber Tyre, Aluminium Ctr	Ball Journal	180	4670IEP250P63	4677IEP250P63	4678IEP250P63
250	50	800	292	140 x 110	105 X 80	11	Nylon	Plain	180	4670UOO250P63	4677UOO250P63	4678UOO250P63
250	50	800	292	140 x 110	105 X 80	11	Polyurethane Tyred Cast Iron Ctr	Ball Journal	180	4670FTP250P63	4677FTP250P63	4678FTP250P63

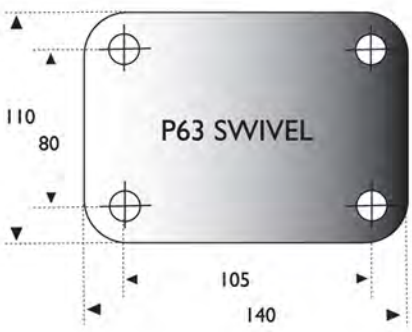

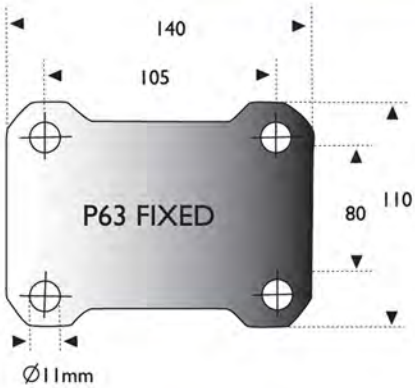

Available with the following wheels

TSK & TFK Series Castors

A range of kingpinless steel castors with single ball race swivel heads. Combine with this the robust fabricated brackets and they offer improved turning, greater impact resistance and better tracking.

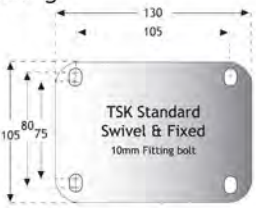

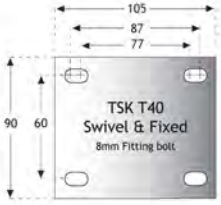

Wheel Dia. (mm)	Tread Width (mm)	Load Cap. (kg)	Overall Height (mm)	Plate / Bolt Hole Dimensions (mm)		Suits Bolt Dia (mm)	Wheel Type	Bearing Type	Swivel Radius (mm)	Catalogue Reference		
				Plate	Hole Ctrs					Swivel	Footbrake	Fixed
100	38	150	142	130 x 105	105 x 80/75	10	Rubber Tyre / Cast Iron Centre	Roller	95	TSK100RU1H	-	TFK100RU1H
100	38	340	142	130 x 105	105 x 80/75	10	Polyurethane Tyre / Cast Iron Centre	Roller	95	TSK100PT1H	-	TFK100PT1H
100	35	340	142	130 x 105	105 x 80/75	10	Polyurethane Tyre / Cast Iron Centre	Ball Journal	95	TSK100PT2H	-	TFK100PT2H
100	45	320	142	130 x 105	105 x 80/75	10	Cast Iron	Roller	95	TSK100CI1H	-	TFK100CI1H
125	40	170	165	130 x 105	105 x 80/75	10	Rubber Tyre / Cast Iron Centre	Roller	115	TSK125RU1H	TSK125RU1HB	TFK125RU1H
125	38	425	165	130 x 105	105 x 80/75	10	Polyurethane Tyre / Cast Iron Centre	Roller	115	TSK125PT1H	TSK125PT1HB	TFK125PT1H
125	38	425	165	130 x 105	105 x 80/75	10	Polyurethane Tyre / Cast Iron Centre	Ball Journal	115	TSK125PT2H	TSK125PT2HB	TFK125PT2H
125	40	330	165	130 x 105	105 x 80/75	10	Nylon	Roller	115	TSK125NY1G	TSK125NY1GB	TFK125NY1G
125	45	630	165	130 x 105	105 x 80/75	10	Cast Iron	Roller	115	TSK125CI1H	-	TFK125CI1H
150	45	370	191	130 x 105	105 x 80/75	10	Rubber Tyre / Cast Iron Centre	Roller	130	TSK150RU15	TSK150RU15B	TFK150RU15
150	40	500	191	130 x 105	105 x 80/75	10	Nylon	Roller	130	TSK150NY15	TSK150NY15B	TFK150NY15
150	50	800	191	130 x 105	105 x 80/75	10	Nylon	Ball Journal	130	TSK150NY2H	TSK150NY2HB	TFK150NY2H
150	38	730	191	130 x 105	105 x 80/75	10	Polyurethane Tyre / Cast Iron Centre	Roller	130	TSK150PT15	TSK150PT15B	TFK150PT15
150	38	730	191	130 x 105	105 x 80/75	10	Polyurethane Tyre / Cast Iron Centre	Ball Journal	130	TSK150PT2H	TSK150PT2HB	TFK150PT2H
150	45	910	191	130 x 105	105 x 80/75	10	Cast Iron	Roller	130	TSK150CI15	-	TFK150CI15
200	50	500	241	130 x 105	105 x 80/75	10	Nylon	Roller	155	TSK200NY15	TSK200NY15B	TFK200NY15
200	50	535	241	130 x 105	105 x 80/75	10	Rubber Tyre / Cast Iron Centre	Roller	155	TSK200RU15	TSK200RU15B	TFK200RU15
200	45	1000	241	130 x 105	105 x 80/75	10	Polyurethane Tyre / Cast Iron Centre	Roller	155	TSK200PT15	TSK200PT15B	TFK200PT15
200	45	1000	241	130 x 105	105 x 80/75	10	Polyurethane Tyre / Cast Iron Centre	Ball Journal	155	TSK200PT2H	TSK200PT2HB	TFK200PT2H
200	45	1000	241	130 x 105	105 x 80/75	10	Cast Iron	Roller	155	TSK200CI15	-	TFK200CI15

2-Way Directional Lock
A two station plunger converting swivel castors into fixed for straight line travel. To order add the suffix **D** to the Catalogue reference.

Wheel Lock
Available on all swivel castors in the TSK range. A simple hand operated parking lock. To order add suffix **W** to the Catalogue reference.

Available with the following wheels

TSH & TFH Series Castors

A well established range of heavy gauge forged steel castors with hardened ball race swivel heads that serve as both thrust and radial bearings. Supplied with nylon seals and a hydraulic grease nipple for ease of maintenance. The closed base of the swivel ring prevents the downward escape of lubricant and completes grease reservoir, Sideplates are press formed to a cylindrical shape to give the best strength to weight ratio and are continuously welded to the swivel ring.

Wheel Dia. (mm)	Tread Width (mm)	Load Cap. (kg)	Overall Height (mm)	Plate / Bolt Hole Dimensions (mm)		Suits Bolt Dia (mm)	Wheel Type	Bearing Type	Swivel Radius (mm)	Catalogue Reference			
				Plate	Hole Ctrs					Swivel	Directional Wheel Lock	Swivel & Wheel Brake	Fixed
100	38	150	152	S 150 x 110 F 150 x 115	105 x 80/75	10	Rubber Tyre / Cast Iron Centre	Roller	102	TSH100RU1H	TSH100RU1HD	-	TFH100RU1H
100	38	340	152	S 150 x 110 F 150 x 115	105 x 80/75	10	Polyurethane Tyre / Cast Iron Centre	Roller	102	TSH100PT1H	TSH100PT1HD	-	TFH100PT1H
100	45	320	152	S 150 x 110 F 150 x 115	105 x 80/75	10	Cast Iron	Roller	102	TSH100CI1H	TSH100CI1HD	-	TFH100CI1H
125	40	170	177	S 150 x 110 F 150 x 115	105 x 80/75	10	Rubber Tyre / Cast Iron Centre	Roller	118	TSH125RU1H	TSH125RU1HD	TSH125RU1HF	TFH125RU1H
125	42	200	177	S 150 x 110 F 150 x 115	105 x 80/75	10	Elastic Rubber Tyre / Aluminium Centre	Ball Journal	118	TSH125GR2H	TSH125GR2HD	TSH125GR2HF	TFH125GR2H
125	38	320	177	S 150 x 110 F 150 x 115	105 x 80/75	10	Polyurethane Tyre / Cast Iron Centre	Roller	118	TSH125PT1H	TSH125PT1HD	TSH125PT1HF	TFH125PT1H
125	45	630	177	S 150 x 110 F 150 x 115	105 x 80/75	10	Cast Iron	Roller	118	TSH125CI1H	TSH125CI1HD	TSH125CI1HF	TFH125CI1H
150	45	370	202	S 150 x 110 F 150 x 115	105 x 80/75	10	Rubber Tyre / Cast Iron Centre	Roller	134	TSH150RU15	TSH150RU15D	TSH150RU15F	TFH150RU15
150	45	370	202	S 150 x 110 F 150 x 115	105 x 80/75	10	Rubber Tyre / Cast Iron Centre	Ball Journal	134	TSH150RU2H	TSH150RU2HD	TSH150RU2HF	TFH150RU2H
150	50	800	202	S 150 x 110 F 150 x 115	105 x 80/75	10	Nylon	Ball Journal	134	TSH150NY2H	TSH150NY2HD	TSH150NY2HF	TFH150NY2H
150	38	730	202	S 150 x 110 F 150 x 115	105 x 80/75	10	Polyurethane Tyre / Cast Iron Centre	Roller	134	TSH150PT15	TSH150PT15D	TSH150PT15F	TFH150PT15
150	38	730	202	S 150 x 110 F 150 x 115	105 x 80/75	10	Polyurethane Tyre / Cast Iron Centre	Ball Journal	134	TSH150PT2H	TSH150PT2HD	TSH150PT2HF	TFH150PT2H
150	45	910	202	S 150 x 110 F 150 x 115	105 x 80/75	10	Cast Iron	Roller	134	TSH150CI15	TSH150CI15D	TSH150CI15F	TFH150CI15
150	45	910	202	S 150 x 110 F 150 x 115	105 x 80/75	10	Cast Iron	Ball Journal	134	TSH150CI2H	TSH150CI2HD	TSH150CI2HF	TFH150CI2H
150	50	1130	202	S 150 x 110 F 150 x 115	105 x 80/75	10	Steel	Ball Journal	134	TSH150ST2H	TSH150ST2HD	TSH150ST2HF	TFH150ST2H
160	42	300	207	S 150 x 110 F 150 x 115	105 x 80/75	10	Elastic Rubber Tyre / Aluminium Centre	Ball Journal	139	TSH160GR2H	TSH160GR2HD	TSH160GR2HF	TFH160GR2H
200	42	400	252	S 150 x 110 F 150 x 115	105 x 80/75	10	Elastic Rubber Tyre / Aluminium Centre	Ball Journal	166	TSH200GR2H	TSH200GR2HD	TSH200GR2HF	TFH200GR2H
200	50	535	252	S 150 x 110 F 150 x 115	105 x 80/75	10	Rubber Tyre / Cast Iron Centre	Roller	166	TSH200RU15	TSH200RU15D	TSH200RU15F	TFH200RU15
200	50	535	252	S 150 x 110 F 150 x 115	105 x 80/75	10	Rubber Tyre / Cast Iron Centre	Ball Journal	166	TSH200RU2H	TSH200RU2HD	TSH200RU2HF	TFH200RU2H
200	50	1500	252	S 150 x 110 F 150 x 115	105 x 80/75	10	Nylon	Ball Journal	166	TSH200NY2H	TSH200NY2HD	TSH200NY2HF	TFH200NY2H
200	45	1100	252	S 150 x 110 F 150 x 115	105 x 80/75	10	Polyurethane Tyre / Cast Iron Centre	Roller	166	TSH200PT15	TSH200PT15D	TSH200PT15F	TFH200PT15
200	45	1100	252	S 150 x 110 F 150 x 115	105 x 80/75	10	Polyurethane Tyre / Cast Iron Centre	Ball Journal	166	TSH200PT2H	TSH200PT2HD	TSH200PT2HF	TFH200PT2H
200	45	1150	252	S 150 x 110 F 150 x 115	105 x 80/75	10	Cast Iron	Roller	166	TSH200CI15	TSH200CI15D	TSH200CI15F	TFH200CI15
200	45	1150	252	S 150 x 110 F 150 x 115	105 x 80/75	10	Cast Iron	Ball Journal	166	TSH200CI2H	TSH200CI2HD	TSH200CI2HF	TFH200CI2H

Nylon Swivel Seal
Supplied as standard on all single wheel swivel castors in the TSH range. A metal swivel seal for uses in temperatures over 60ºC is available by special request . Add the suffix **Z** to the Catalogue reference when ordering.

Available with the following wheels

TSH & TFH Series

Heavy Duty Industrial use castors.

Wheel Dia. (mm)	Tread Width (mm)	Load Cap. (kg)	Overall Height (mm)	Plate / Bolt Hole Dimensions (mm)		Suits Bolt Dia (mm)	Wheel Type	Bearing Type	Swivel Radius (mm)	Catalogue Reference			
				Plate	Hole Ctrs					Swivel	Wheel Brake	Swivel & Wheel Brake	Fixed
250	54	615	303	S 150 x 110 F 150 x 115	105 x 80/75	10	Rubber Tyre / Cast Iron Centre	Roller	207	TSH250RU1H	TSH250RU1HB	TSH250RU1HF	TFH250RU1H
250	54	615	303	S 150 x 110 F 150 x 115	105 x 80/75	10	Rubber Tyre / Cast Iron Centre	Ball Journal	207	TSH250RU2H	TSH250RU2HB	TSH250RU2HF	TFH250RU2H
250	60	1500	303	S 150 x 110 F 150 x 115	105 x 80/75	10	Nylon	Ball Journal	207	TSH250NY2H	TSH250NY2HB	TSH250NY2HF	TFH250NY2H
250	45	1200	303	S 150 x 110 F 150 x 115	105 x 80/75	10	Polyurethane Tyre / Cast Iron Centre	Roller	207	TSH250PT1H	TSH250PT1HB	TSH250PT1HF	TFH250PT1H
250	45	1200	303	S 150 x 110 F 150 x 115	105 x 80/75	10	Polyurethane Tyre / Cast Iron Centre	Ball Journal	207	TSH250PT2H	TSH250PT2HB	TSH250PT2HF	TFH250PT2H
250	54	1240	303	S 150 x 110 F 150 x 115	105 x 80/75	10	Cast Iron	Roller	207	TSH250CI1H	TSH250CI1HB	TSH250CI1HF	TFH250CI1H
250	54	1240	303	S 150 x 110 F 150 x 115	105 x 80/75	10	Cast Iron	Ball Journal	207	TSH250CI2H	TSH250CI2HB	TSH250CI2HF	TFH250CI2H
300	54	680	353	S 150 x 110 F 150 x 115	105 x 80/75	10	Rubber Tyre / Cast Iron Centre	Roller	245	TSH300RU1H	TSH300RU1HB	TSH300RU1HF	TFH300RU1H
300	54	680	353	S 150 x 110 F 150 x 115	105 x 80/75	10	Rubber Tyre / Cast Iron Centre	Ball Journal	245	TSH300RU2H	TSH300RU2HB	TSH300RU2HF	TFH300RU2H
300	45	1400	353	S 150 x 110 F 150 x 115	105 x 80/75	10	Polyurethane Tyre / Cast Iron Centre	Roller	245	TSH300PT1H	TSH300PT1HB	TSH300PT1HF	TFH300PT1H
300	45	1400	353	S 150 x 110 F 150 x 115	105 x 80/75	10	Polyurethane Tyre / Cast Iron Centre	Ball Journal	245	TSH300PT2H	TSH300PT2HB	TSH300PT2HF	TFH300PT2H

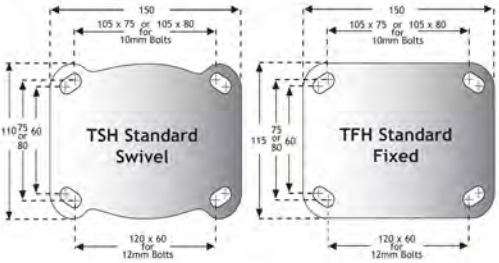

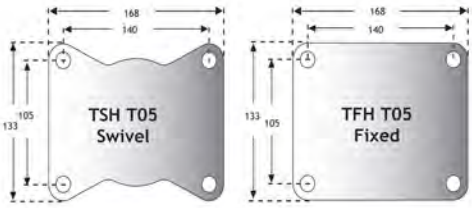

Standard Top plate
Supplied as standard unless alternatives are specified.

T05 Top Plate
Available on all castors in range except the 2FH. Use with 12mm Bolts. To order add suffix **T05** to the Catalogue reference.

T24 Imperial Top Plate
Call Sales for details.

Wheel Lock
Available on all swivel castors in the TSH range. A simple hand operated parking lock. To order add suffix **W** to the Catalogue reference.

4-Way Directional Lock
A four station plunger converting swivel castors into fixed for straight line travel. Available on all TSH Swivel castors. Cannot be used with braked castors. To order add the suffix **D** to the Catalogue reference.

Lever Lock
A rocking pedal that presses a plunger onto the wheel also locks the swivel. Increases overall height by 32mm. Available on 150mm & 200mm sizes with standard Top Plates only. To order add suffix **L** to the Catalogue reference.

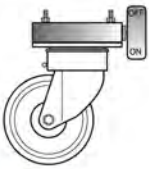

Available with the following wheels

2SH & 2FH Series Twin Wheel

A range of heavy gauge forged steel castors with twin wheels that offer a larger 'footprint' and easier turning due to differential action of the wheels. Offering low overall height the range features hardened ball race swivel heads, serving as both thrust and radial bearings.
Twin wheel 2SH castors are supplied with metal swivel seals as standard.

Hydraulic grease nipple on the swivel ring reservoir. Sideplates are press formed to cylindrical shape to give the best strength to weight ratio and are continuously welded to the swivel ring.

Load capacities to 1500kg. Maximum towing speed 6kph.

Wheel Dia. (mm)	Tread Width (mm)	Load Cap. (kg)	Overall Height (mm)	Plate / Bolt Hole Dimensions (mm)		Suits Bolt Dia (mm)	Wheel Type	Bearing Type	Swivel Radius (mm)	Catalogue Reference			
				Plate	Hole Ctrs					Swivel	Wheel Brake	Swivel & Wheel Brake	Fixed
125	2 x 38	720	177	S 150 x 110 F 150 x 175	105 x 80/75	10	Polyurethane Tyre / Cast Iron Centre	Roller	125	2SH125PT1H	-	-	2FH125PT1H
125	2 x 45	945	177	S 150 x 110 F 150 x 175	105 x 80/75	10	Cast Iron	Roller	125	2SH125CI1H	-	-	2FH125CI1H
150	2 x 38	1240	202	S 150 x 110 F 150 x 175	105 x 80/75	10	Polyurethane Tyre / Cast Iron Centre	Roller	140	2SH150PT15	-	-	2FH150PT15
150	2 x 50	1360	202	S 150 x 110 F 150 x 175	105 x 80/75	10	Nylon	Ball Journal	140	2SH150NY2H	-	-	2FH150NY2H
150	2 x 45	1365	202	S 150 x 110 F 150 x 175	105 x 80/75	10	Cast Iron	Roller	140	2SH150CI15	-	-	2FH150CI15
200	2 x 45	1500	252	S 150 x 110 F 150 x 175	105 x 80/75	10	Polyurethane Tyre / Cast Iron Centre	Roller	170	2SH200PT15	-	-	2FH200PT15
200	2 x 50	1500	252	S 150 x 110 F 150 x 175	105 x 80/75	10	Nylon	Ball Journal	170	2SH200NY2H	-	-	2FH200NY2H
200	2 x 45	1500	252	S 150 x 110 F 150 x 175	105 x 80/75	10	Cast Iron	Roller	170	2SH200CI15	-	-	2FH200CI15

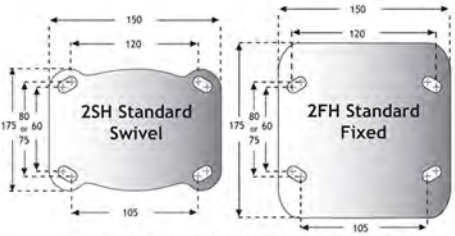

105 x 80/75 for 10mm bolt & 120 x 60 for 12mm bolt

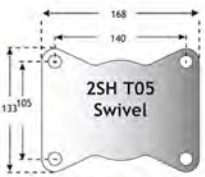

140 x 105 for 12mm bolt
To order add **T05** to Catalogue reference.

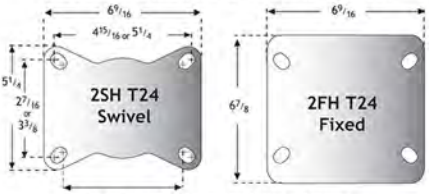

To order add T24 to Catalogue reference.

Twin Wheel Locks
Available on all swivel castors in the 2SH range. A simple hand operated parking lock. To order add suffix **W** to the Catalogue reference.

Ball Journal Bearings
Available on all sizes of castor with Polyurethane tyred cast iron wheels To order substitute **PT2H** for **PT1H** in the Catalogue reference.

4-Way Directional Lock
A four station plunger converting swivel castors into fixed for straight line travel. To order add the suffix **D** to the Catalogue reference.

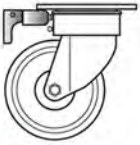

Available with the following wheels

TSP & TFP Series

A range of heavy duty towable castors with large diameter hardened ball races to the swivel heads. Bracket sideplates are press formed to give a heavier gauge cylindrical shape similar to the H series.

Standard Top Plates are to ISO2184 c4 dimensions. Designed to be used under medium tow trailer conditions, the most durable combination recommended uses Polyurethane tyred ball journal wheels, particularly with 75mm wide tread.

Alternative Top Plates are available to special order.

Towing Speed
Load capacities shown are based upon maximum towing speeds of 6kph (3.7mph).

Wheel Dia. (mm)	Tread Width (mm)	Load Cap. (kg)	Overall Height (mm)	Plate / Bolt Hole Dimensions (mm)		Suits Bolt Dia (mm)	Wheel Type	Bearing Type	Swivel Radius (mm)	Catalogue Reference		
				Plate	Hole Ctrs					Swivel	Wheel Brake	Fixed
150	40	370	213	170 x 135	140 x 105	12	Rubber Tyre / Cast Iron Centre	Ball Journal	134	TSP150RU2H	TSP150RU2HB	TFP150RU2H
150	38	730	213	170 x 135	140 x 105	12	Polyurethane Tyre / Cast Iron Centre	Ball Journal	134	TSP150PT2H	TSP150PT2HB	TFP150PT2H
150	45	910	213	170 x 135	140 x 105	12	Cast Iron	Ball Journal	134	TSP150CI2H	TSP150CI2HB	TFP150CI2H
150	55	2000	213	170 x 135	140 x 105	12	Steel	Taper Roller	134	TSP150STTP	TSP150STTPB	TFP150STTP
160	42	300	218	170 x 135	140 x 105	12	Elastic Rubber Tyre / Aluminium Centre	Ball Journal	139	TSP160GR2H	TSP160GR2HB	TFP160GR2H
200	42	400	264	170 x 135	140 x 105	12	Elastic Rubber Tyre / Aluminium Centre	Ball Journal	172	TSP200GR2H	TSP200GR2HB	TFP200GR2H
200	50	535	264	170 x 135	140 x 105	12	Rubber Tyre / Cast Iron Centre	Ball Journal	172	TSP200RU2H	TSP200RU2HB	TFP200RU2H
200	45	1100	264	170 x 135	140 x 105	12	Polyurethane Tyre / Cast Iron Centre	Ball Journal	172	TSP200PT2H	TSP200PT2HB	TFP200PT2H
200	45	1150	264	170 x 135	140 x 105	12	Cast Iron	Ball Journal	172	TSP200CI2H	TSP200CI2HB	TFP200CI2H
200	75	1800	264	170 x 135	140 x 105	12	Polyurethane Tyre / Cast Iron Centre	Ball Journal	172	WSP200PT2P	WSP200PT2PB	WFP200PT2P
200	75	500	264	170 x 135	140 x 105	12	Demountable Rubber Tyre / Cast Iron Centre	Ball Journal	172	XSP200DR2X	XSP200DR2XB	XFP200DR2X
200	55	2000	264	170 x 135	140 x 105	12	Steel	Taper Roller	172	TSP200STTP	TSP200STTPB	TFP200STTP
250	54	615	314	170 x 135	140 x 105	12	Rubber Tyre / Cast Iron Centre	Ball Journal	207	TSP250RU2H	TSP250RU2HB	TFP250RU2H
250	45	1200	314	170 x 135	140 x 105	12	Polyurethane Tyre / Cast Iron Centre	Ball Journal	207	TSP250PT2H	TSP250PT2HB	TFP250PT2H
250	54	1240	314	170 x 135	140 x 105	12	Cast Iron	Ball Journal	207	TSP250CI2H	TSP250CI2HB	TFP250CI2H
250	75	2000	314	170 x 135	140 x 105	12	Polyurethane Tyre / Cast Iron Centre	Ball Journal	207	WSP250PT2P	WSP250PT2PB	WFP250PT2P
250	80	675	314	170 x 135	140 x 105	12	Demountable Rubber Tyre / Cast Iron Centre	Ball Journal	207	XSP250DR2X	XSP250DR2XB	XFP250DR2X
300	54	680	365	170 x 135	140 x 105	12	Rubber Tyre / Cast Iron Centre	Ball Journal	245	TSP300RU2H	TSP300RU2HB	TFP300RU2H
300	45	1400	365	170 x 135	140 x 105	12	Polyurethane Tyre / Cast Iron Centre	Ball Journal	245	TSP300PT2H	TSP300PT2HB	TFP300PT2H
300	85	800	365	170 x 135	140 x 105	12	Demountable Rubber Tyre / Cast Iron Centre	Ball Journal	245	XSP300DR2X	XSP300DR2XB	XFP300DR2X

4-Way Directional Lock
A four station plunger converting swivel castors into fixed for straight line travel. Available on standard Top Plate castors with 105mm X 140mm bolt hole centres only.
To order add the suffix **D** to the Catalogue reference.

Alternative Top Plates
To order Top Plates with 120mm x 60/76mm Bolt hole centres add the suffix **XP3** to Catalogue reference when ordering.
To order Imperial Top Plates (as shown above)add **T22** to Catalogue reference when ordering. Please call for dimensions.

Available with the following wheels

Wheel Re-Tyring

Rebonding Polyurethane wheels is a highly cost effective and simple way of repairing or upgrading your equipment.

Equipment in need of Repair or Upgrade?

Keystone offer a full re-tyring service for tyred, cast centre wheels.

Having problems with lack of Traction?

We can supply softer shore hardness for your specialist applications

Wheels not lasting long enough?

Extend the life of equipment by having old Rubber tyred wheels re-tyred with Polyurethane.

- Make savings on Upgrades or Repairs
- Quick Turn Around
- Specialist Applications no problem
- Custom Coloured Polyurethanes
- Various Shore Hardnesses available

Specialist Polyurethanes Available to Order

BROWN

All standard retyring jobs will be produced in caramel brown Polyurethane as shown below right.

WHITE

Non-Marking Polyurethane.

GREEN

Polyurethane for extreme loads being moved at slow speeds e.g. Heavy duty rotating drums.

RED

High load Polyurethane for use on drive wheels as they have soft shore hardness to provide higher traction characteristics without flattening out when left standing.

BLACK

Polyurethane in a soft shore hardness that mimics many of the characteristics of rubber but offers an extended working life.

* Replacement Polyurethane tyres can be reproduce in any colour when a specific match is required.

A Flexible Service on New Polyurethane Tyres

Re-tyred wheels can be moulded onto almost any cast centre then formed to your specific requirements for your equipment.

Re-Tyring Sales

call

T 0115 978 6004

F 0115 942 2919

or

Email

sales@reidsofnottingham.co.uk

Tell us what you want, we will get a competitive quote to you by return.

* Please note that retyring is not available for pallet truck rollers.

TSX & XSX Series

A very rugged range designed to withstand the severe conditions of power towing.
Swivel heads are fitted with sealed Taper Roller Bearings and are fully adjustable without the removal of the castor from the trailer.
Some castors in the XSX & XFX series are available with rubber shear discs fitted between the axle and forks. The effect is to dampen any shock loads between the wheels and the chassis. Call technical sales for further details. Load capacities to 2750kg dependent upon tow speeds. See table below for details.

Wheel Dia. (mm)	Tread Width (mm)	Load Capacity at Tow Speeds (kg)				Overall Height (mm)	Plate / Bolt Hole Dimensions (mm)		Suits Bolt Dia (mm)	Wheel Type	Bearing Type	Swivel Radius (mm)	Catalogue Reference		
		6 kph	10kph	16kph	20kph		Plate	Hole Ctrs					Swivel	Footbrake	Fixed
200	75	500	400	300	250	278	171 x 137	127 x 102	16	Demountable Rubber tyre / Cast Iron Centre	Ball Journal	176	XSX200DR2X	XSX200DR2XB	XFX200DR2X
200	75	1800	1440	1000	720	278	171 x 137	127 x 102	16	Polyurethane Tyre / Cast Iron Centre	Taper Roller	176	TSX200PTTT	TSX200PTTTB	TFX200PTTT
250	80	675	540	410	340	328	171 x 137	127 x 102	16	Demountable Rubber tyre / Cast Iron Centre	Ball Journal	202	XSX250DR2X	XSX250DR2XB	XFX250DR2X
250	75	2500	2000	1400	1000	328	171 x 137	127 x 102	16	Polyurethane Tyre / Cast Iron Centre	Taper Roller	202	TSX250PTTT	TSX250PTTTB	TFX250PTTT
300	80	800	640	480	400	379	171 x 137	127 x 102	16	Demountable Rubber tyre / Cast Iron Centre	Ball Journal	251	XSX300DR2X	XSX300DR2XB	XFX300DR2X
300	75	2750	2200	1540	1100	379	171 x 137	127 x 102	16	Polyurethane Tyre / Cast Iron Centre	Taper Roller	251	TSX300PTTT	TSX300PTTTB	TFX300PTTT

Wheel Lock
Available on all swivel castors in the TSX & XSX range.
A simple hand operated parking lock.
To order add suffix **W** to the Catalogue reference.

4-Way Directional Lock
A four station plunger converting swivel castors into fixed for straight line travel.
To order add the suffix **D** to the Catalogue reference.

Available with the following wheels

TSY & 2SZ Series

A range of extra heavy duty castors with kingpinless swivel bearing heads. Two large diameter hardened ball bearing raceways with hardened track offer superb performance. TSY castors are fitted with a single wheel, while 2SZ castors are fitted with twin wheels.
Load capacities to 11400kg

Directional Lock
A four (TSZ) or eight (2SZ) station plunger lock converting swivel castors into fixed for straight line travel. To order add the suffix **D** to the Catalogue reference.

Swivel Seal
A swivel seal is fitted as standard inside the swivel head.

Wheel Dia. (mm)	Tread Width (mm)	Load Cap. (kg)	Overall Height (mm)	Plate / Bolt Hole Dimensions (mm)		Suits Bolt Dia (mm)	Wheel Type	Bearing Type	Swivel Radius (mm)	Catalogue Reference	
				Plate	Hole Ctrs					Swivel	Fixed
400	125	6700	550	S 255 x 205 F 255 x 230	210 x 160	20	Polyurethane Tyre / Cast Iron Centre	Taper Roller	320	TSY400PT3Z	TFY400PT3Z
400	2x125	11400	570	ø 365	300 pcd	24	Polyurethane Tyre / Cast Iron Centre	Taper Roller	350	2SZ400PT3Z	2FZ400PT3Z

TST & TFT Series

Designed for use in adverse conditions with heavy loading, poor floor conditions and shock loading.
The polyurethane tyred wheels use Vulkollan polyurethane.

Wheel Dia. (mm)	Tread Width (mm)	Load Cap. (kg)	Overall Height (mm)	Plate / Bolt Hole Dimensions (mm)		Suits Bolt Dia (mm)	Wheel Type	Bearing Type	Swivel Radius (mm)	Catalogue Reference		
				Plate	Hole Ctrs					Swivel	Footbrake	Fixed
150	63	2270	202	S 238 x 197 F 235 x 140	197 x 102	16	Steel	Taper Roller	188	TST150STTT	-	TFT150STTT
200	75	1800	252	S 238 x 197 F 235 x 140	197 x 102	16	Polyurethane Tyre / Cast Iron Centre	Taper Roller	213	TST200PTTT	TST200PTTTB	TFT200PTTT
200	85	5080	278	S 238 x 197 F 235 x 140	197 x 102	16	Steel	Taper Roller	187	XST200ST3T	-	XFT200ST3T
250	75	2500	303	S 238 x 197 F 235 x 140	197 x 102	16	Polyurethane Tyre / Cast Iron Centre	Taper Roller	238	TST250PTTT	TST250PTTTB	TFT250PTTT
300	75	2750	354	S 238 x 197 F 235 x 140	197 x 102	16	Polyurethane Tyre / Cast Iron Centre	Taper Roller	264	TST300PTTT	TST300PTTTB	TFT300PTTT
400	100	1700	473	S 238 x 197 F 235 x 140	197 x 102	16	Rubber Tyre / Cast Iron Centre	Taper Roller	318	XST400RUTT	-	XFT400RUTT
400	100	4500	473	S 238 x 197 F 235 x 140	197 x 102	16	Polyurethane Tyre / Cast Iron Centre	Taper Roller	318	XST400PTTT	-	XFT400PTTT

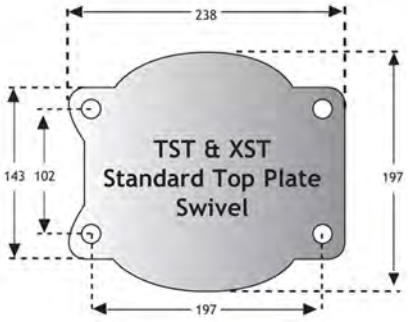

Supplied as standard.

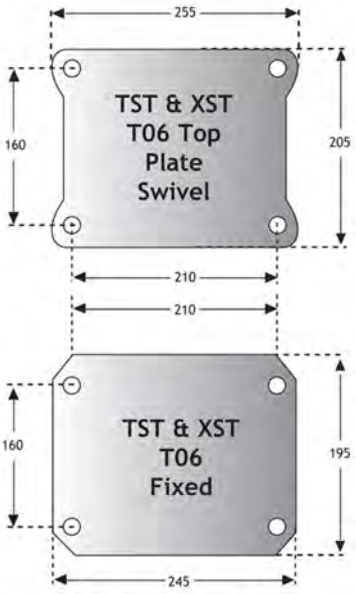

T06 Top Plates available for XFT castors.
To order add T06 to Catalogue reference.

Wheel Lock
Available on all swivel castors in the TST range. A simple hand operated parking lock. To order add suffix **W** to the Catalogue reference.

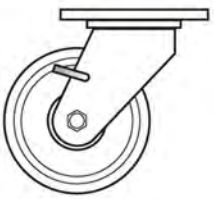

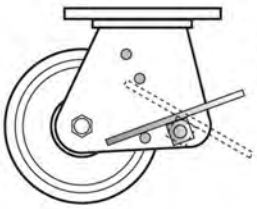

Footbrake
Available on TST castors with Polyurethene tyres only.

4-Way Directional Lock
A four station plunger converting swivel castors into fixed for straight line travel. Overall height is increased by 37mm on TST and 21mm on XST castors. To order add the suffix **D** to the Catalogue reference.

Available with the following wheels

2ST & 2FT Series

This twin wheeled range are based upon the TST range. Compact overall height is therefore maintained.
For use in harsh conditions with heavy loading, poor floor conditions and shock loading.

The polyurethane tyred wheels use Volkollan polurethane.
Load capacities to 4675kg
Maximum towing speed of 6kph

Wheel Dia. (mm)	Tread Width (mm)	Load Cap. (kg)	Overall Height (mm)	Plate / Bolt Hole Dimensions (mm)		Suits Bolt Dia (mm)	Wheel Type	Bearing Type	Swivel Radius (mm)	Catalogue Reference		
				Plate	Hole Ctrs					Swivel	Footbrake	Fixed
200	75	3060	268	S 238 x 197 F 235 x 223	197 x 102	16	Polyurethane Tyre / Cast Iron Centre	Taper Roller	232	2ST200PTTC	-	2FT200PTTC
250	75	4250	319	S 238 x 197 F 235 x 223	197 x 102	16	Polyurethane Tyre / Cast Iron Centre	Taper Roller	254	2ST250PTTC	-	2FT250PTTC
300	75	4675	369	S 238 x 197 F 235 x 223	197 x 102	16	Polyurethane Tyre / Cast Iron Centre	Taper Roller	279	2ST300PTTB	-	2FT300PTTB

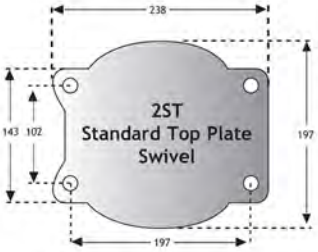

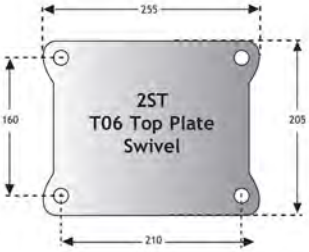

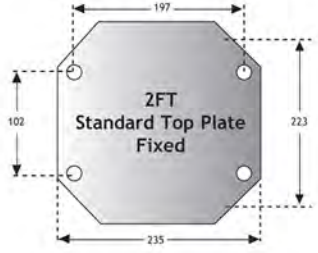

Supplied as standard.

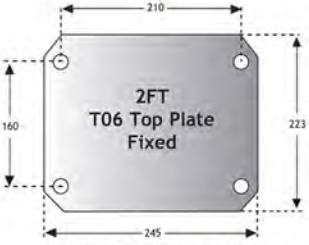

Alternative T06 Top Plates suitable for 16mm diameter bolt. To order add **T06** to Catalogue reference.

4-Way Directional Lock
A four station plunger converting swivel castors into fixed for straight line travel. Overall height is increased by 26mm.

To order add the suffix **D** to the Catalogue reference.

Wheel Lock
Available on all swivel castors in the 2ST range. A simple hand operated parking lock.

To order add suffix **W** to the Catalogue reference.

EH Series

An extra heavy duty range of tapered roller bearing swivel and matching fixed castors. Swivel castors are available with a two-way directional locking mechanism.

A single expanding hub brake for fixed castor EHF312RTTMBR is available.
See details below.

Wheel Dia. (mm)	Tread Width (mm)	Load Cap. (kg)	Overall Height (mm)	Plate / Bolt Hole Dimensions (mm)		Suits Bolt Dia (mm)	Wheel Type	Bearing Type	Swivel Radius (mm)	Catalogue Reference		
				Plate	Hole Ctrs					Swivel	Directional Lock	Fixed
1 to 2.25 Tonnes Load Capacity												
200	76	1270	305	178 x 153	127 x 102	16	Polyurethane Tyre / Cast Iron Centre	Taper Roller	172	EH108SUTM	EH108SUTML	EHF108SUTM
250	76	2270	356	178 X 153	127 X 102	16	Polyurethane Tyre / Cast Iron Centre	Taper Roller	197	EH110SUTM	EH110SUTML	EHF110SUTM
2 to 4 Tonnes Load Capacity												
150	70	3270	264	178 X 153	127 X 102	16	Cast Iron	Taper Roller	146	EH306HCTM	EH306HCTML	EHF306HCTM
250	76	2950	368	178 x 153	127 x 102	16	Polyurethane Tyre / Cast Iron Centre	Taper Roller	197	EH210SUTM	EH210SUTML	EHF210SUTM
250	76	3270	368	178 x 153	127 x 102	16	Cast Iron	Taper Roller	197	EH310HCTM	EH310HCTML	EHF310HCTM
300	76	2950	422	178 x 153	127 x 102	16	Polyurethane Tyre / Cast Iron Centre	Taper Roller	222	EH212SUTM	EH212SUTML	EHF212SUTM
300	102	4080	422	S 178 x 153 F 178 x 184	127 x 102	16	Polyurethane Tyre / Cast Iron Centre	Taper Roller	222	EH312SUTM	EH312SUTML	EHF312SUTM
300	102	2000	422	S 178 x 153 F 178 x 184	127 x 102	16	Rubber Tyre / Cast Iron Centre	Taper Roller	240	EH312RTTM40	EH312RTTM40L	EHF312RTTM40
4 to 7 Tonnes Load Capacity												
250	102	7025	400	S 229 x 178 F 229 x 216	178 x 127	20	Cast Iron	Taper Roller	210	EH510HCTM	EH510HCTML	EHF510HCTM
400	127	6120	552	S 229 x 178 F 229 x 216	178 X 127	20	Polyurethane Tyre / Cast Iron Centre	Taper Roller	286	EH516SUTM	EH516SUTML	EHF516SUTM

Tapered roller bearings in both swivel heads and axles of the forged steel, powder coated brackets mean this range are suitable for very heavy applications and power towing.

Two way directional locks convert swivel castors to fixed, by the release of a spring loaded plunger. Locked direction of travel is in line with the longer side of the top plate.

Expanding hub brakes are available for Fixed castors only. EHF brakes castors are handed.

Add suffix **'LH'** for left hand and **'RH'** for right hand. Available to order on the following castor only:

EHF312RTTMBR
EHF312SUTMBR

Also avilable with the following wheels

Technical Sales: Tel: 0115 9786 004 Fax: 0115 9422 919 Emil: sales@reidsofnottingham.co.uk
www.reidsofnottingham.co.uk

The ISO Towcastors enable ISO Freight Containers to be moved quickly and easily without the use of expensive equipment.

Using the Extra Heavy Duty EH Series Castor, the kit consists of the items showns below:

Towcastor (Swivel shown)	Locking Screw	Lifting Handle	Ratchet Spanner
2 off Swivel Towcastor 2 off Fixed Towcastor	Quantity = 4	Quantity = 1	Quantity = 1

Description	Wheel Diameter (mm)	Tread Width (mm)	Mounting Height (mm)	Load Capacity	Part Number
10 Tonne Set	250	76	400	10 Tonne	ISO-210SUTM
12 Tonne Set	300	102	454	12 Tonne	ISO-312SUTM

PNB Series & Puncture Proof Range

Two ranges of rugged castors and wheels suitable for a variety of more demanding external applications

PNB Series Pneumatic Castors

Wheel Dia (mm)	Tread Width (mm)	Load Cap (kg)	Overall Height (mm)	Top Plate Dimentions		Bolt Ctrs	Wheel Type	Bearing Type	Swivel Radius (mm)	Catalogue Reference		
				Plate	Bolt Ctrs					Swivel	Braked	Fixed
200	50	75	240	S137 X 105 F137 X 115	105 X 80	10	Pneumatic Rubber Tyre (Rib Tread Block)	Roller	155	KS200PNB	KS200PNBBR	KF200PNB
200	85	150	302	S200 X 160 F200 X 160	150 X 115	14	Pneumatic Rubber Tyre (Diamond Tread Black)	Roller	215	KS260APNB	K260APNBR	KF260APNB
200	85	150	302	S200 X 160 F200 X 160	150 X 115	14	Pneumatic Rubber Tyre (Diamond Tread Black)	Roller	215	KS260APWRRIB	KS260APWRRIBBR	KF260APWRRIB

Puncture Proof Castors

Wheel Dia. (mm)	Tread Width (mm)	Load Cap. (kg)	Overall Height (mm)	Top Plate Dimensions		Bolt Ctrs	Wheel Type	Bearing Type	Swivel Radius	Catalogue Reference		
				Plate	Plate					Swivel	Braked	Fixed
200	50	100	240	S137 X 105 F135 X 115	105 X 80	10	Puncture Proof Tyre	Roller	155	KS200EWA	KS200EWABR	KF200EWA
240	85	150	297	S200 X 160 F200 X 160	150 X 115	14	Puncture Proof Tyre	Roller	210	KS260EWA	KS260EWABR	KF260EWA

Replacement wheels to suit above castors

Wheel Dia. (mm)	Tread Width (mm)	Bore Size (mm)	Hub Length (mm)	Load Capacity (kg)	Bearing Type	Type Colour / Tread Pattern	Catalogue Reference
Pneumatic Wheels							
200	50	20	60	75	Roller	Black / Rib	AW200PNB
260	85	20	88	150	Roller	Black / Diamond	AW260PNB
260	85	20	75	150	Roller	Grey / Rib	2622OR
Puncture Proof Wheels							
200	50	20	60	100	Roller	Black / Rib	EWA200R20/60BLACK
260	85	20	75	150	Roller	Black / Rib	PWR260PUNCTUREPROOF

34 Series(Pressed Steel Bracket) & GNG Series (Fabricated Bracket)

Pressed or fabricated steel brackets, specialist wheels and double ball race swivel heads make these ranges suitable for use in more extreme internal and external applications.

Rated to temperatures of -40 to +280 C.

GNG Series Frames and wheels are supplied **GREASE FREE** with grease nipples for the user to apply the appropriately rated high temperature grease. Temperature ratings will then be dependent upon the specific grease used.

Wheel Dia. (mm)	Tread Width (mm)	Load Cap. (kg)	Overall Height (mm)	Plate / Bolt Hole Dimensions (mm)		Suits Bolt Dia. (mm)	Wheel Type	Bearing Type	Swivel Radius (mm)	Catalogue Reference		
				Plate	Bolt Ctrs					Swivel	Swivel Braked	Fixed
34 Series Top Plate Fitting												
80	35	100	108	Swivel 105 x 85 Fixed 103 x 85	80/77 x 60	9	Phenolic Resin	Plain	84.5	3470BOO080P62	3477BOO080P62	3478BOO080P62
100	35	125	128	Swivel 105 x 85 Fixed 103 x 85	80/77 x 60	9	Phenolic Resin	Plain	91	3470BOO100P62	3477BOO100P62	3478BOO100P62
125	35	150	155	Swivel 105 x 85 Fixed 103 x 85	80/77 x 60	9	Phenolic Resin	Plain	102.5	3470BOO125P62	3477BOO125P62	3478BOO125P62
160	50	250	200	Swivel 137 x 105 Fixed 137 x 115	105 x 80	11	Phenolic Resin	Plain	135	3470BOO160P63	3477BOO160P63	3478BOO160P63
200	50	300	240	Swivel 137 x 105 Fixed 137 x 115	105 x 80	11	Phenolic Resin	Plain	135	3470BOO200P63	3477BOO200P63	3478BOO200P63
34 Series Bolt Hole Fitting												
80	35	100	108	-	-	13	Phenolic Resin	Plain	84.5	3470BOO080P30	3477BOO080P30	n/a
100	35	150	128	-	-	13	Phenolic Resin	Plain	91	3470BOO100P30	3477BOO100P30	n/a
125	40	200	155	-	-	13	Phenolic Resin	Plain	102.5	3470BOO125P30	3477BOO125P30	n/a
GNG Series Top Plate Fitting (Fabricated Bracket)												
100	45	320	142	130 X 105	105 x 80/75	10	Cast Iron	Plain	89	TSG100CI0GNG	n/a	TFG100CI0GNG
150	45	450	189	130 X 105	105 x 80/75	10	Cast Iron	Plain	124	TSG150CI0GNG	n/a	TFG150CI0GNG

BOO Series High Temperature Wheels

Phenolic Resin wheels with a Plain bore. temperature rated from -40 C to +280 C

Wheel Dia. (mm)	Tread Width (mm)	Bore Size (mm)	Hub Length (mm)	Load Cap. (kg)	Bearing Type	Catalogue Reference
80	35	12.2	40	100	Plain	BOO0803512
100	35	12.2	40	125	Plain	BOO1003512
125	35	12.2	40	150	Plain	BOO1253512
160	50	20.2	58	250	Plain	BOO1605020
200	50	20.2	58	300	Plain	BOO2005020

Single Wheel Castors

A comprehensive range of high load to height ratio castors for use in applications where a low working height is desirable.

XSH Series

KF Series

Working Heights Available

KS Series

Wheel Dia. (mm)	Tread Width (mm)	Load Cap. (kg)	Overall Height (mm)	Fitting Dimensions (mm)		Suits Bolt Dia (mm)	Wheel Type	Bearing Type	Swivel Radius (mm)	Catalogue Reference	
				Plate	Hole Ctrs					Swivel	Fixed
KS & PH Series : Heavy Duty											
75	48	500	115	100 x 100	78x78/64x64	15	Cast Nylon	Ball Journal	80	PH75NSF	n/a
82	70	650	137	175 X 140	140 X 105	15	Polyurethane	Ball Journal	86	KS8270PTB	KF8270PTB
82	70	650	137	175 x 140	140 x 105	12	Nylon	Ball Journal	86	KS8270NYB	KF8270NYB
XSH Series : Medium / Heavy Duty (Directional locks are available on these - add 'D' to end Catalogue Reference when ordering)											
85	75	600	144	150 X 110	120 X 60	12	Polyurethane	Ball Bearing	100	XSH 085 PT2MZ	XFH 085 PT2M
85	75	410	144	150 x 110	120 x 60	12	Nylon	Ball Bearing	100	XSH 085 NY2MZ	XFH 085 NY2M
KS Series : Light / Medium Duty											
35	28	100	59	-	-	M10 X 20	Polyurethane	Ball Bearing	33	KS035PTBST	-

Twin Wheel Castors

2SL and 138 Series castors offer exceptional load capacity in relation to their low overall working height. Ideal for heavy equipment being used on smooth flooring and only requiring occasional movement. The differential action from the twin wheels makes for a smooth action.

Wheel Dia. (mm)	Tread Width (mm)	Load Cap. (kg)	Overall Height (mm)	Fitting Dimensions (mm)			Wheel Type	Bearing Type	Swivel Radius (mm)	Catalogue Reference	
				Plate	Hole Ctrs	Bolt to fit				Swivel	Fixed
138 Series (Antistatic wheels are available on these - Contact Sales with your requirements)											
50	2 X 22	200	82.5	95 X 70	76 X 44.5	8	Polyurethane	Ball Race	55.5	1380020	-
2SL Series											
50	2 X 14	160	64	95	51 PCD	M6 Countersink head screws	Polyurethane	Plain	50	2SL 050 PTOL	-
50	2 X 14	270	64	95	51 PCD		Steel	Plain	50	2SL 050 STOL	-
50	2 X 14	160	64	95	51 PCD		Nylon	Plain	50	2SL 050 NYOL	-

Scene Shifters

Easy 360 degrees manouverability
Designed for applications in Theatres, Conference Centres and Exhibition Halls.

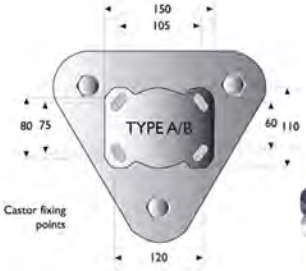

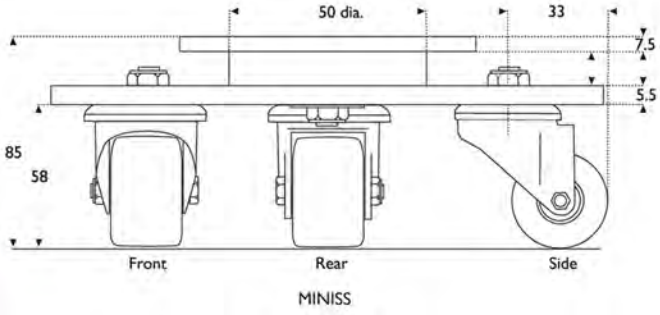

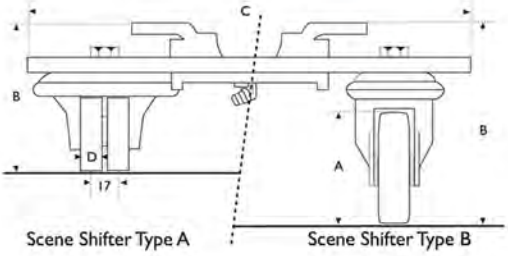

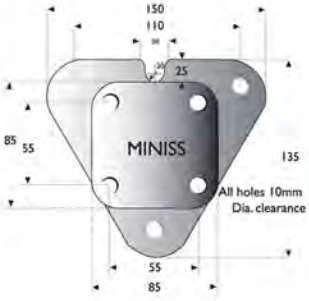

A Wheel Dia. (mm)	D Tread Width (mm)	Load Cap. (kg)	B Overall Height (mm)	Plate / Bolt Hole Dimensions		Suits Bolt Dia. (mm)	Wheel Type	Bearing Type	C Swivel Dia. (mm)	Unit Weight (kg)	Catalogue Reference	
				Plate	Bolt Ctrs						Scene Shifter	Spare Wheel
Mini Scene Shifter : Fitted with Ultra Low-level KS series castors												
35	28	300	85	85 X 85	55 X 55	10	Polyurethane	Ball Bearing	95	1.8	MINISS	KS035PTBST
Type A Scene Shifter : Fitted with Low-level 2SL series twin wheeled castors												
50	14	360	96	150 X 110	105 X 80	10	Nylon	Plain	308	7	2SL 050 NY0LX	050NY0L
50	14	360	96	150 X 110	105 X 80	10	Poly Tyre / Cast Iron Centre	Plain	308	8	2SL 050 PT0LX	050PT0L
Type B Scene Shifter : Fitted with BS4 series Castors * Available on Pg 61												
100	35	460	168	150 X 110	120/105 X 80/60	10	Nylon	Plain	436	8	BS4 100 NY04X	100 NY04
100	35	460	168	150 X 110	120/105 X 80/60	10	Nylon	Roller	436	8	BS4 100 NY14X	100NY14
100	35	300	168	150 X 110	120/105 X 80/60	10	Rubber Tyre / Cast Iron Centre	Plain	436	11	BS4 100 RU04X	100RU04
100	29	460	168	150 X 110	120/105 X 80/60	10	Poly Tyre / Cast Iron Centre	Plain	436	11	BS4 100 PT04X	100 PT04
100	29	460	168	150 X 110	120/105 X 80/60	10	Poly Tyre / Cast Iron Centre	Roller	436	11	BS4 100 PT14X	100 PT14
125	35	460	193	150 X 110	120/105 X 80/60	10	Nylon	Plain	464	9	BS4 125 NY04X	125 NY04
125	35	460	193	150 X 110	120/105 X 80/60	10	Nylon	Roller	464	9	BS4 125 NY14X	125 NY14
125	38	360	193	150 X 110	120/105 X 80/60	10	Rubber Tyre / Cast Iron Centre	Plain	464	12	BS4 125 RU04X	125RU04
125	38	360	193	150 X 110	120/105 X 80/60	10	Rubber Tyre / Cast Iron Centre	Roller	464	12	BS4 125 RU14X	125 RU14
125	32	460	193	150 X 110	120/105 X 80/60	10	Poly Tyre / Cast Iron Centre	Plain	464	12	BS4 125 PT04X	125 PT04
125	32	460	193	150 X 110	120/105 X 80/60	10	Poly Tyre / Cast Iron Centre	Roller	464	12	BS4 125 PT14X	125 PT14

Universal Gate Castors

With a black weatherproof finish for outdoor use, bracket bodies are fabricated in heavy duty steel. Castor bodies fitted are zinc plated, with wheels in sized from 63mm to 125mm. Telescopic compression starts at 20kg of pressure and will be fully compressed at 30kg with a maximum travel of 65mm.

Fit to gates using 12mm bolts.

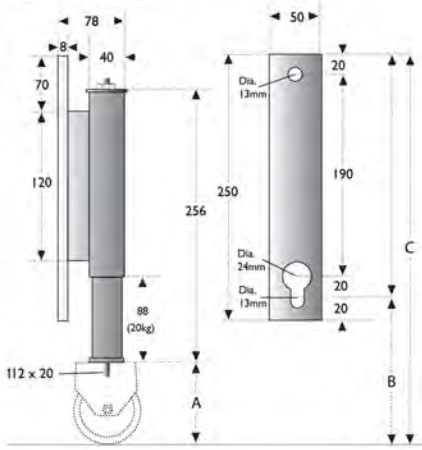

Castor Height A (mm)	Fitting Heights (mm) B	C	Wheel Type	Catalogue Reference
92	154	394	63mm Nylon	GCBF063NY
104	166	396	75mm Nylon	GCBF075NY
134	196	426	100mm Nylon	GCBF100NY
134	196	426	100mm Rubber Tyred	GCBF100RU
159	221	451	125mm Nylon	GCBF125NY
159	221	451	125mm Rubber Tyred	GCBF125RU
159	221	451	125mm Poly Tyred Cast Iron	GCBF125PT

FULLY ENCLOSED SPRING FOR OUTDOOR USE

Panel /Plate Skate

A simple and effective means of moving large or cumbersome sheet materials. the hardwearing steel skates automatically adjust to any material thickness up to 56mm. Fitted with two 150mm Nylon wheels and in black powder coatd finish the maximum load capacity is 250kg per unit.

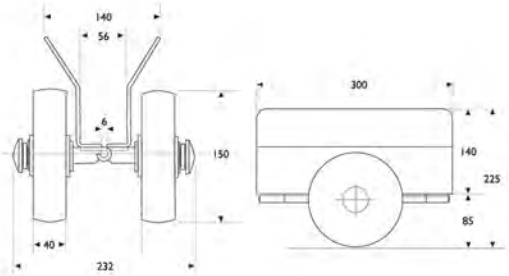

Wheel Dia. (mm)	Overall Height (mm)	Overall Length (mm)	Tread Width (mm)	Load Cap. (kg)	Wheel Type	Unit Weight (kg)	Catalogue Reference
20X 150	225	300	2 X 40	250	Nylon	4.2	KPS15056

Truck Locks
4040, TLCH and TLCM Series

Foot operated truck locks for immobilising mobile equipment. A choice of top plate or side plate fitting units are available. It is important that locks are fitted correctly according to the specification to enable optimum performance.

4040-0206 / 7

4040-0101

TLCH Series

TLCML Lock

Fitting Type	Suits Wheel Sizes (mm)	Operating Height (mm)	Retracted Height (mm)	Plate / Bolt Hole Dimensions		Suits Bolt Dia. (mm)	Finish	Unit Weight (kg)	Catalogue Reference
				Plate (mm)	Bolt Ctrs (mm)				
4040 Series	Designed to allow castored equipment to be immobilised in most locations by a simple foot peddal operation.								
Top Plate	100	143	119	137 X 94	92 X 67	10	Bronze	4	4040-0101
Top Plate	100	150	125	120 X 120	85/100 X 85/100	10	Green	2	4040-0206
Top Plate	150	210	170	120 X 120	85/100 X 85/100	10	Green	2	4040-0207
TLCH Series	Designed to bolt to the underside of the truck. It is ESSENTIAL that the TLCH should be mounted with the top face exactly 200mm above the ground surface to ensure correct operation and performance.								
Top Plate	-	208	163.5	152 X 114	127 X 63.5	12	Black	5.6	TLCH
TLCM Series	Designed to be bolted onto the side or end of the truck. Fixing holes can be drilled to suit by the user. Four 10mm clearance fitting holes aresuggested, the top pair being 353mm and the lower pair not less than 226mm above the ground surface. When the locks are correctly fitted the foot pad must be 33mm from the floor with the linkage in the raised position. These locks are available in handed pairs. The Catalogue reference suffix "R" indicates the unit with the lever on the right.								
Side Plate	-	381	346	165 X 114	Drill to suit	10	Bright Zinc	3	TLCMR
Side Plate	-	381	346	165 X 114	Drill to suit	10	Bright Zinc	3	TLCML

Pallet Feet

A range of pallet feet and nesting plugs designed for fitting to palet legs of box or angle type.

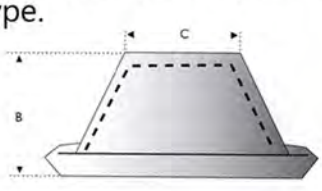

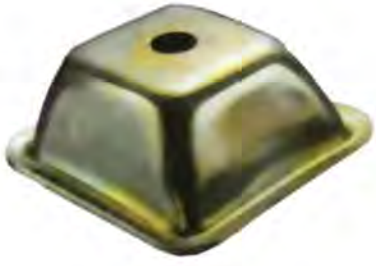

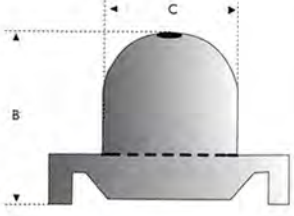

Type	Dimensions (mm)			Pallet		SWG	Catalogue Reference
	A	B	C	Leg Type	Size (mm)		
Pallet Foot	127 X 127	54	56	Box / Angle	50	13	KPF1A

JC AND JA SERIES JACKING CASTORS

Jacking Castors offer a quick and accurate solution where vertical movement of working platforms are machines is required. lifts achievable from 75mm to 150mm. Load capacities from 80kg to 2500kg.

Important Information
When adjusting units fitted with multiple jacking castirs it is **ESSENTIAL** that they are all adjusted simultaneously so that an even load distribution is maintained. Failure to do this may result in significant damage to the jacking castors. and the units to which they are fitted,

JCLD

Wheel Dia. (mm)	Overall Height (mm)	Swivel Radius (mm)	Tread Width (mm)	Bolt Hole Ctrs (mm)	Suits Bolt Dia. (mm)	Height to Lower Bolt when Extended (mm)	Bearing Type	Catalogue Reference			
								Nylon	Cast Iron	Rubber Tyred Cast Iron	Poly. Tyred Cast Iron
Light Duty - 100mm Lift											
75 3"	419	73	NY=35 CI=34 RT=32 SU=25	75	12	238	Plain	JCLD3NY 160KG	JCLD3CI 160KG	JCLD3RT 80KG	JCLD3SU 160KG
100 4"	444	91	NY=35 CI=38 RT=35 SU=29	75	12	264	Plain	JCLD4NY 160KG	JCLD4CI 160KG	JCLD4RT 135KG	JCLD4SU 160KG
125 5"	469	105	NY=35 CI=38 RT=38 SU=32	75	12	290	Plain	JCLD5NY 160KG	JCLD5CI 160KG	JCLD5RT 160KG	JCLD5SU 160KG
Medium Duty - 75mm Lift											
150 6"	518	129	NY=40 CI=45 RT=45 SU=38	114.3 X 63.5	12	305	Plain	JCMD150NY 230KG	JCMD150CI 230KG	JCMD150RT 230KG	JCMD150SU 230KG
200 8"	562	154	NY=50 CI=45 RT=50 SU=45	114.3 X 63.5	12	349	Plain	JCMD200NY 230KG	JCMD200CI 230KG	JCMD200RT 230KG	JCMD200SU 230KG

JCMD

JCHD

Wheel Dia. (mm)	Overall Height (mm)	Swivel Radius (mm)	Tread Width (mm)	Bolt Hole Ctrs (mm)	Suits Bolt Dia. (mm)	Height to Lower Bolt when Extended (mm)	Bearing Type	Catalogue Reference			
								Nylon	Cast Iron	Rubber Tyred Cast Iron	Poly. Tyred Cast Iron
Heavy Duty - 75mm Lift											
150 6"	556	135	45	114.3 X 63.5	12	291	Roller	n/a	JCHD6CIB 1020KG	JCHD6RTB 400KG	JCHD6SUB 725KG
200 8"	607	160	51	114.3 X 63.5	12	342	Roller	n/a	JCHD8CIB 1090KG	JCHD8RTB 585KG	JCHD8SUB 1045KG

Extra Heavy Duty - 150mm Lift * Supplied with two way directional lock as standard											
250	745	197	76	100 X 100	16	318	Taper Roller	n/a	n/a	n/a	JA210SUTML 2500kg

JA EXTRA HEAVY DUTY

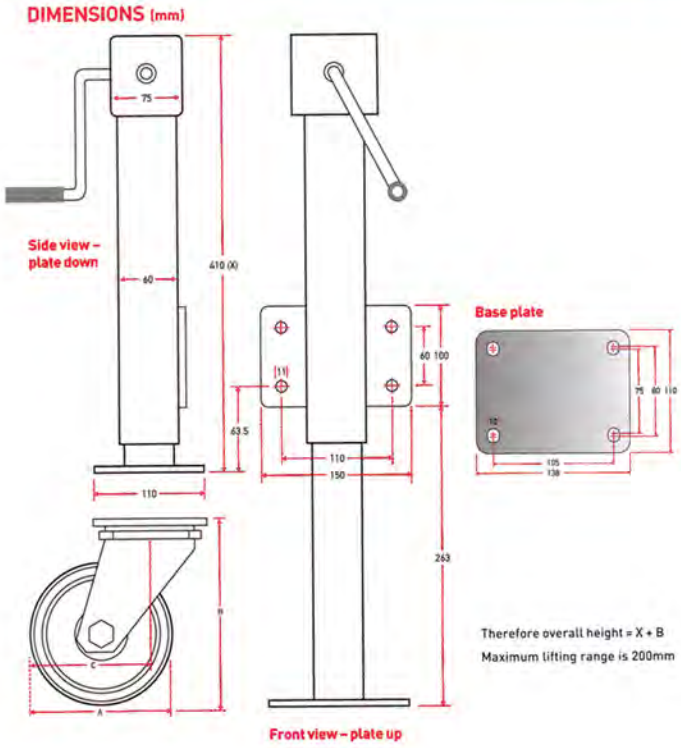

Wheel Dia. (mm)	Overall Height (mm)	Swivel Radius (mm)	Tread Width (mm)	Bolt Hole Ctrs (mm)	Suits Bolt Dia. (mm)		Bearing Type	Catalogue Reference				
								Nylon	Blue Elastic Tyre Nylon Centre	Black Painted Cast Iron	Polyurethane Tyre Nylon Centre	Polyurethane Tyre Cast Iron Centre
125	165	108	50 NY=45 PN=40 PT=40	105 x 75	10		Roller	JCHS125NYB 600KG	JCHS125RNB 300KG	JCHS125CIB 550KG	JCHS125PNB 350KG	JCHS125PTB 400KG
125	165	108	50 NY=45 PN=40 PT=40	105 x 75	10		Ball Journal	JCHS125NYBJ 600KG	JCHS125RNBJ 300KG	JCHS125CIBJ 550KG	JCHS125PNBJ 350KG	JCHS125PTBJ 400KG
150	190	125	50 NY=45	105 X 80	10		Roller	JCHS150NYB 600KG	JCHS150RNB 450KG	JCHS150CIB 1000KG	JCHS150PNB 600KG	JCHS150PTB 750KG
150	190	125	50 NY=45	105 X 80	10		Ball Journal	JCHS150NYBJ 600KG	JCHS150RNBJ 450KG	JCHS150CIBJ 1000KG	JCHS150PNBJ 600KG	JCHS150PTBJ 750KG
200	240	154	50	138 X 110	10		Roller	JCHS200NYB 600KG	JCHS200RNB 450KG	JCHS200CIB 1000KG	JCHS200PNB 650KG	
200	240	154	50	138 X 110	10		Ball Journal	JCHS200NYBJ 600KG	JCHS200RNBJ 450KG	JCHS200CIBJ 1000KG	JCHS200PNBJ 650KG	JCHS200PTBJ 1000KG

Ball Tranfer Units

There are many possible applications for the ball transfer units, their loads need to be moved smoothly, precisely and with minimum effort in any direction.
Some typical applications include cargo and baggage handling, assembly lines, as a castor, machine loading, sliding door systems, machine tables, etc.

FIXING METHODS

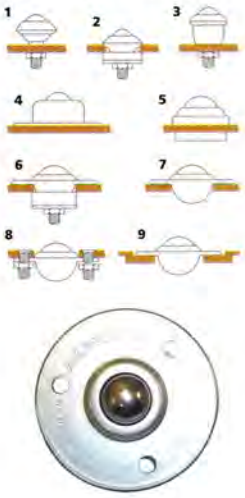

DESIGN & CONSTRUCTION

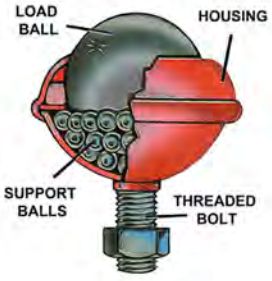

SPG Series Glass Handling Castors

Specialist castors for applications involving glass handling or other materials with delicate or polished surfaces. Available in 35mm or 50mm sizes they can be supplied with rubber, cost effective polyurethane or long lasting vulkallon balls for heavier duty or more arduous applications. To prevent the ingress of dust inclined wheel bearings and dust covers are supplied as standard. Designed to be mounted in suotable base plates predrilled with 14mm holes, then adjusted for height to suit. Replacement balls are available.

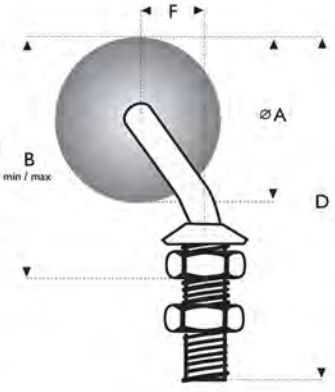

Dia. A (mm)	Load Cap. (kg)	Operating Height B		D (mm)	E (mm)	F (mm)	Turning circle (mm)	Catalogue Reference					
		Min (mm)	Max (mm)					Rubber Left Handed	Rubber Right Handed	Polyurethane Left Handed	Polyurethane Right Handed	Vulkollan Left Handed	Vulkollan Right Handed
35	12	54	71	87	14	20	75	RBGL35075	RBGR35075	WKGL35075	WKGR35075	VKGL3075	VKGR35075
50	20	69	91	107	14	22	94	RBGL50100	RBGR50100	WKGR50100	WKGR50100	VKGL50100	VKGR50100

Fooma Silent Running Castors

Eliminate rattle noise with our range of smooth silent running castors.
Precision castors with a pressed steel frame with zinc galvanised finish.

HIGH QUALITY - NO NOISE

- Top plate Swivel with brake
- Rubber Tyre / Polypropylene Centre (PR)

- Top plate Swivel without brake
- Polyurethane Tyre / Aluminium Centre (PAU)

- Bolt Hole Swivel with brake
- Polyurethane (TPU) Tyre / Polypropylene Centre (P)

Top Plate Fitting

Wheel Dia. (mm)	Tread Width (mm)	Load Cap. (kg)	Overall Height (mm)	Plate Size (mm)	Bolt Ctrs (mm)	Wheel Type	Bearing Type	Swivel Radius (mm)	Catalogue Reference		
									Swivel	Swivel Braked	Fixed
100	30	75	140	100 x 85	80 X 60	Polyurethane (TPU) Tyre / Polypropylene Centre	Ball Bearing	95	P100ASF	P100BSF	P100ARF
100	30	75	140	100 x 85	80 X 60	Rubber Tyre / Polypropylene Centre	Ball Bearing	95	PR100ASF	PR100BSF	PR100ARF
100	30	120	140	100 x 85	80 X 60	Polyurethane Tyre / Aluminium Centre	Ball Bearing	95	PAU100ASF	PAU100BSF	PAU100ARF
125	30	90	165	100 x 85	80 X 60	Polyurethane (TPU) Tyre / Polypropylene Centre	Ball Bearing	107.5	P125ASF	P125BSF	P125ARF
125	30	90	165	100 x 85	80 X 60	Rubber Tyre / Polypropylene Centre	Ball Bearing	107.5	PR125ASF	PR125BSF	PR125ARF
125	30	120	165	100 x 85	80 X 60	Polyurethane Tyre / Aluminium Centre	Ball Bearing	107.5	PAU125ASF	PAU125BSF	PAU125ARF

Bolt Hole Fitting

Wheel Dia. (mm)	Tread Width (mm)	Load Cap. (kg)	Overall Height (mm)	Suits Bolt (mm)	Wheel Type	Bearing Type	Swivel Radius (mm)	Catalogue Reference	
								Swivel	Swivel Braked
100	30	75	140.8	M12	Polyurethane (TPU) Tyre / Polypropylene Centre	Ball Bearing	111	P100ASS	P100BSF
100	30	75	140.8	M12	Rubber Tyre / Polypropylene Centre	Ball Bearing	111	PR100ASS	PR100BSF
100	30	120	140.8	M12	Polyurethane Tyre / Aluminium Centre	Ball Bearing	111	PAU100ASS	PAU100BSF
125	30	90	165.8	M12	Polyurethane (TPU) Tyre / Polypropylene Centre	Ball Bearing	123	P125ASS	P125BSS
125	30	90	165.8	M12	Rubber Tyre / Polypropylene Centre	Ball Bearing	123	PR125ASS	PR125BSS
125	30	120	165.8	M12	Polyurethane Tyre / Aluminium Centre	Ball Bearing	123	PAU125ASS	PAU125BSS

CALL TECHNICAL SALES FOR FURTHER DETAILS:

Tel 0115 9786 004 Fax: 0115 9422 919 Email: sales@reidsofnottingham.co.uk

KGD Light and Medium Duty Castors

Designed to offer 360 degrees swivel castor function, this easily operated range offer mobility, levelling and vibration damping features for light to medium weight equipment. Footmaster multifunctional castors allow users to move and position large equipment single handedly. Levelling can be achieved with ease. Static load capacities of 50kg to 500kg and dynamic load capacities of 25kg to 250 kg offer unrivalled mobility.

KGDN S Type

KGD-40S

50Kg Static and 25Kg Dynamic load capacity
Die cast aluminium footpad with vibration damping rubber pad
Forged steel flange and swivel head
Die cast aluminium body
Powder coated ivory finish
Nylon handwheel with M8 leveler

KGDN F Type

KGD/R-60F/S

250Kg Static and 125Kg Dynamic load capacity
Die cast aluminium footpad with vibration damping rubber pad
Forged steel Top plate, flange and swivel head
Die cast aluminium body
Powder coated ivory finish
Nylon handwheel with M10 leveler

KGDR S Type

500Kg Static and 250Kg Dynamic load capacity
Die cast aluminium footpad with vibration damping rubber pad
Forged steel Top plate, flange and swivel head
Die cast aluminium body
Powder coated ivory finish
Nylon handwheel with M12 leveler or retractable ratchet

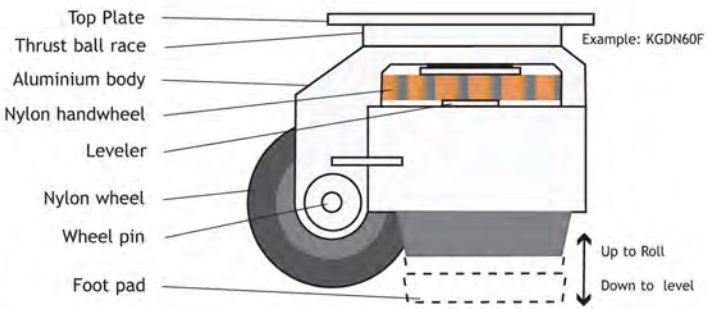

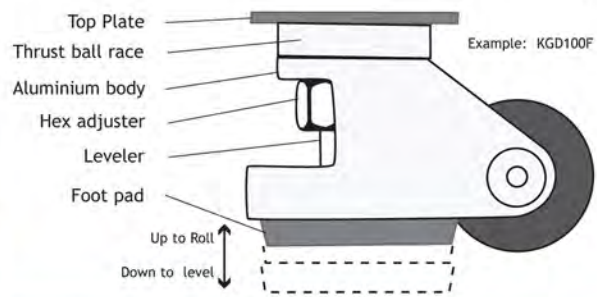

KGD Heavy Duty Castors

Designed for heavy machinery applications, this easily operated range solve problems associated with movement required for positioning and maintenance. Static load capacities of 750kg to 1500kg and dynamic load capacities of 375kg to 750kg offer unparalleled manouverability and flexibility for large scale equipment.

KGD-100F 750Kg Static and 375Kg Dynamic load capacity
Die cast aluminium footpad with vibration damping rubber pad
Forged steel Top plate, flange and swivel head
Die cast aluminium body
Powder coated ivory finish
Nylon handwheel with M12 leveler

KGD-120F 1000Kg Static and 500Kg Dynamic load capacity
Die cast aluminium footpad
Forged steel Top plate and swivel head
Die cast aluminium body
Powder coated ivory finish
Hex adjuster with M16 leveler (spanner required)

KGD-150F 1500Kg Static and 750Kg Dynamic load capacity
Die cast aluminium footpad with vibration damping rubber pad
Forged steel Top plate and swivel head
Die cast aluminium body
Powder coated ivory finish
Hex adjuster with M20 leveler (spanner required)

Top Plate Fitting Type

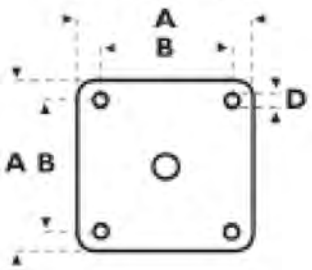

Stem Fitting Types

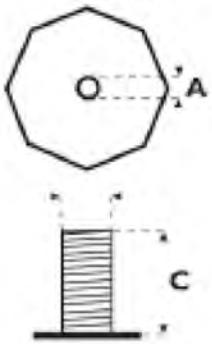

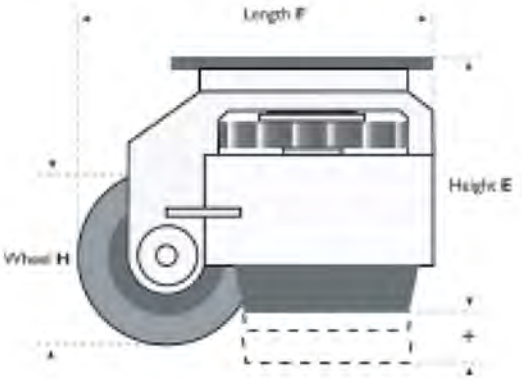

For dimensional diagrams see opposite page.

Fitting Type	Load Cap (kg)		Method of Operating	Top Plate (mm)	Fixing Centres (mm)	Stem Size (mm)	Bolt Holes (mm)	Dimensions (mm)				Unit Weight (kg)	Catalogue Reference
	Static	Dynamic		A	B	C	D	E	F	G	H		
Stem	50	25	Handwheel	O 40AF	-	M8 x 15	-	71 + 10	84	58	42	0.35	KGD-40S
Top Plate	250	125	Handwheel	73 x 73	58 x 58	-	6.5	82 + 10	100	70	50	0.75	KGD-60F
Stem	250	125	Handwheel	O 46AF	-	M12 x 18	-	82 + 10	100	70	50	0.75	KGD-60S
Top Plate	250	125	Ratchet	73 x 73	58 x 58	-	6.5	82 + 10	100	70	50	0.75	KGDR-60F
Stem	250	125	Ratchet	O 46AF	-	M12 x 18	-	82 + 10	100	70	50	0.75	KGDR-60S
Top Plate	500	250	Handwheel	90 x 90	70 x 70	-	9	102 + 15	125	85	63	1.35	KGD-80F
Top Plate	500	250	Ratchet	90 x 90	70 x 70	-	9	102 + 15	125	85	63	1.35	KGDR-80F
Top Plate	750	375	Handwheel	95 x 95	70 x 70	-	11	120 + 12	142	95	75	1.85	KGD-100F
Stem	750	375	Handwheel	O 64AF	-	M16 x 24	-	120 + 12	142	95	75	1.85	KGD-100S
Top Plate	1000	500	Hex Spanner	95 x 95	70 x 70	-	11	120 + 12	137	95	75	2.10	KGD-120F
Top Plate	1500	750	Hex Spanner	100 x 100	70 x 70	-	13	130 + 15	137	110	97	3.30	KGD-150F

Note
Recommended loading = Dynamic load X Number of Units.

SSH and SSF Series

Styled on the H series castor this range uses the stacks of disc springs assembled in various combinations to give a comprehensively wide range of load ratings. Ball journal bearings are fitted to all wheels. Adhering to the working load specifications shown below will ensue the best performance in good to average conditions.

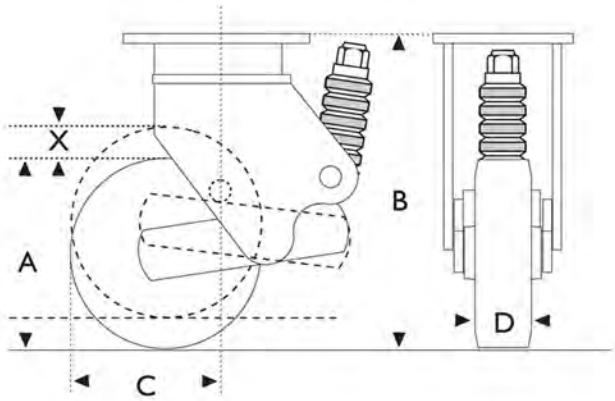

A Wheel Dia. (mm)	B Overall Height (mm)	C Swivel Radius (mm)	D Tread Width (mm)	Plate / Bolt Hole Dimensions		Suits Bolt Dia. (mm)	Wheel Type	Bearing Type	Catalogue Reference		Working Load Ratings Add appropriate suffix from table below to Catalogue Reference to order						
				Plate	Bolt Ctrs (Slotted)				Swivel	Fixed	100kg	200kg	300kg	370kg	490kg*	600kg*	740kg*
125	235	127	40	Swivel 150 X 110 Fixed 150 x 115	105 X 75/80 or 120 X 60	10 or 12	Rubber Tyre, Cast Iron Centre	Ball Journal	SSH125RU2H	SFH125RU2H	KG0	-	-	-	-	-	-
125	235	127	38	Swivel 150 X 110 Fixed 150 x 115	105 X 75/80 or 120 X 60	10 or 12	Polyurethane Tyre, Cast Iron Centre	Ball Journal	SSH125PT2H	SFH125PT2H	KG0	KG1	KG2	-	-	-	-
150	248	133	45	Swivel 150 X 110 Fixed 150 x 115	105 X 75/80 or 120 X 60	10 or 12	Rubber Tyre, Cast Iron Centre	Ball Journal	SSH150RU2H	SFH150RU2H	KG0	KG1	KG2	-	-	-	-
150	248	133	38	Swivel 150 X 110 Fixed 150 x 115	105 X 75/80 or 120 X 60	10 or 12	Polyurethane Tyre, Cast Iron Centre	Ball Journal	SSH150PT2H	SFH150PT2H	KG0	KG1	KG2	KG3	KG4	KG5	-
200	273	159	50	Swivel 150 X 110 Fixed 150 x 115	105 X 75/80 or 120 X 60	10 or 12	Rubber Tyre, Cast Iron Centre	Ball Journal	SSH200RU2H	SFH200RU2H	KG0	KG1	KG2	KG3	-	-	-
200	273	159	45	Swivel 150 X 110 Fixed 150 x 115	105 X 75/80 or 120 X 60	10 or 12	Polyurethane Tyre, Cast Iron Centre	Ball Journal	SSH200PT2H	SFH200PT2H	KG0	KG1	KG2	KG3	KG4	KG5	KG6
* KG4, KG5 and KG6 are fitted with double spring stacks									Movement (mm) to Stop X		25	25	22	22	25	22	22

Sales & Technical Support

Tel: 0115 9786 004 Fax: 0115 9422 919

Email: sales@reidsofnottingham.co.uk www.reidsofnottingham.co.uk

WNY Series Wheels

A range of Nylon wheels suitable for a vast variety of industrial uses.

WNY Series & Heavy Duty

White Nylon wheels are light in weight, have high load capacities, are clean and are able to be used wth a minimum of lubrication. They are practically non-marking, cause very little floor damage and are resistant to oils, fats, alkalis, soaps and detergents.

They should not be used in contact with concentrated acids, although some exposure to diluted acid is possible. They may be used at temperatures from -20 degrees to +80 degrees although they are at their best between -5 degrees and + 40 degrees.

Where extreme conditions are involved, tests should be conducted to establish the best choice of wheel material. All wheels are virgin nylon and in natural white.

For more information contact our sales team now.

Wheel Dia. (mm)	Tread Width (mm)	Bore Size (mm)	Hub Length (mm)	Load Cap. (kg)	Bearing Type	Catalogue Reference
40	17	8	20	18	Plain	WNY04001
50	17	8	20	50	Plain	WNY05001
50	20	8	24	55	Plain	WNY05002
50	14	12	17	80	Plain	WNY0500L
63	17	8	20	50	Plain	WNY06301
63	25	10	30	120	Plain	WNY06303
75	20	10	24	60	Plain	WNY07502
75	25	10	30	160	Plain	WNY07503
75	35	12	45	160	Plain	WNY07504
75	35	12	45	160	Roller	WNY07514
80	34	12	44.4	200	Plain	UOO0803012
100	20	10	24	75	Plain	WNY10002
100	25	10	30	135	Plain	WNY10003
100	35	12	45	225	Plain	WNY10004
100	35	12	45	225	Roller	WNY10014
100	35	20	60	225	Plain	WNY1000G
100	35	12	44.4	200	Plain	U001003512
100	36	12	44.4	200	Roller	UOR1003612
125	25	12	30	135	Plain	WNY12503
125	35	12	45	270	Plain	WNY12504
125	35	12	45	270	Roller	WNY12514
125	40	20	60	330	Plain	WNY1250G
125	40	20	60	330	Roller	WNY1251G
125	40	12	44.4	300	Plain	UOO1254012
125	40	12	44.4	250	Roller	UOR1254012
150	40	25.4	60	500	Roller	WNY150RA
150	50	20	60	800	Ball Journal	WNY1502H
160	40	20	58	500	Plain	UOO1604020
160	40	20	58	400	Roller	UOR1604020
200	50	25.4	60	500	Roller	WNY200RA
200	50	20	60	1000	Plain	WNY2000E
200	50	25	60	1500	Ball Journal	WNY2002H
200	46	20	58	600	Plain	UOO2005020
200	50	20	58	400	Roller	UOR2005020
250	60	25	60	2000	Ball Journal	WNY2502H

Tel: 0115 9786 004 Fax: 0115 9422 919 Email: sales@reidsofnottingham.co.uk

WRN,WPN Series

Ranges of rubber and polyurethane tyred wheels suitable for a vast variety of industrial uses.

WRN/UER Series

Blue /Grey elastic non marking rubber tyre with black nylon centre.

Wheel Dia. (mm)	Tread Width (mm)	Bore Size (mm)	Hub Length (mm)	Load Cap. (kg)	Bearing Type	Catalogue Reference
50	22	6.4	27	27	Plain	WRN20
63	25	9.5	33	45	Plain	WRN25
75	32	12	40	90	Plain	WRN3M12
100	38	15	48	160	Plain	WRN4M15
100	38	15	48	160	Roller	WRN4RBM15
100	35	12	44.4	150	Roller	UER1003512BLUE
125	40	12	44.4	250	Roller	UER1254012BLUE
125	38	15	48	180	Plain	WRN5M15
125	38	15	48	180	Roller	WRN5RBM15
150	45	20	60	300	Plain	WRN6M20
150	45	20	60	300	Roller	WRN6RBM20
160	50	20	58	350	Ball Journal	AW160RNBJBLUE
160	50	20	58	350	Ball Journal	AW160RNBJGREY
200	50	20	60	450	Plain	WRN8M20
200	50	20	60	450	Roller	WRN8RBM20
200	50	20	58	450	Ball Journal	AW200RNBJBLUE
200	50	20	58	450	Ball Journal	AW200RNBJGREY

WPN /UAO Series

Red or Orange polyurethane tyre with a nylon centre.

Wheel Dia. (mm)	Tread Width (mm)	Bore Size (mm)	Hub Length (mm)	Load Cap. (kg)	Bearing Type	Catalogue Reference
100	35	12	40	160	Roller	WPN41RBM12
100	35	15	48	250	Plain	WPN4M15
100	35	15	48	250	Roller	WPN4RBM15
125	35	12	40	180	Roller	WPN51RBM12
125	35	15	48	300	Plain	WPN5M15
125	35	15	48	300	Roller	WPN5RBM15
150	45	20	60	600	Plain	WPN6M20
150	45	20	60	600	Roller	WPN6RBM20
150	45	12	61	600	Ball Journal	WPN6BJM12
150	45	20	57	600	Ball Journal	WPN6BJM20
150	45	25	57	600	Ball Journal	WPN6BJM25
200	50	20	60	650	Plain	WPN8M20
200	50	20	60	650	Roller	WPN8RBM20
200	50	12	61	650	Ball Journal	WPN8BJM12
200	50	20	57	650	Ball Journal	WPN8BJM20
200	50	25	57	650	Ball Journal	WPN8BJM25

PNBJ Series
Polyurethane Tyre on a Nylon Centre

Wheel Dia. (mm)	Tread Width (mm)	Bore Size (mm)	Hub Length (mm)	Load Cap. (kg)	Bearing Type	Catalogue Reference
125	40	15	45	300	Ball Journal	AW125PNBJ
150	45	20	58	500	Ball Journal	AW150PNBJ
200	50	20	58	600	Ball Journal	AW200PNBJ

WED, WCI, WHC and WGR Series

Ranges of medium duty polypropylene and heavy duty cast iron wheels suitable for demanding industrial requirements.

WED Series
Medium Duty

Grey Polypropylene wheel.

Wheel Dia. (mm)	Tread Width (mm)	Bore Size (mm)	Hub Length (mm)	Load Cap. (kg)	Bearing Type	Catalogue Reference
41	19	6.4	21	20	Plain	WED158
50	19	6.4	21	27	Plain	WED234
63	19	6.4	24	34	Plain	WED2534
75	25	8.4	27	60	Plain	WED325
100	25	8.4	27	75	Plain	WED425
100	35	12	40	125	Plain	WED41M12
100	35	12	40	125	Roller	WED41RBM12
125	35	12	40	125	Plain	WED51M12
125	35	12	40	125	Roller	WED51RBM12

WCI Series
Heavy Duty

Black Cast Iron wheel.

Wheel Dia. (mm)	Tread Width (mm)	Bore Size (mm)	Hub Length (mm)	Load Cap. (kg)	Bearing Type	Catalogue Reference
50	22	6.4	27	61	Plain	WCI20
63	25	9.5	33	122	Plain	WCI25
75	32	12	40	170	Plain	WCI3M12
100	38	15	48	450	Plain	WCI4M15
100	38	15	48	450	Roller	WCI4RBM15
125	41	15	48	630	Plain	WCI5M15
125	41	15	48	630	Roller	WCI5RBM15
150	45	20	60	1180	Plain	WCI6M20
150	45	20	60	1180	Roller	WCI6RBM20
150	45	25.4	60	1180	Plain	WCI6L
200	45	20	60	1270	Plain	WCI8M20
200	45	20	60	1270	Roller	WCI8RBM20
200	45	25	60	1270	Roller	WCI8RBM25
200	45	25.4	60	1270	Plain	WCI8L
200	45	25.4	60	1270	Roller	WCI8LRB
250	51	25	60	1360	Roller	10RBM25
250	51	25.4	60	1360	Roller	WCI10RB

WHC Series
Extra Heavy Duty

Black cast iron wheel.

Wheel Dia. (mm)	Tread Width (mm)	Bore Size (mm)	Hub Length (mm)	Load Cap. (kg)	Bearing Type	Catalogue Reference
150	70	31.8	92	3270	Taper Roller	WHC306TM
250	76	31.8	92	3270	Taper Roller	WHC310TM
250	102	34.9	148	7025	Taper Roller	WHC510TM

WGR Series
Heavy Duty

Black V grooved cast iron wheel.
Groove width 25mm x 90º.

Wheel Dia. (mm)	Tread Width (mm)	Bore Size (mm)	Hub Length (mm)	Load Cap. (kg)	Bearing Type	Catalogue Reference
150	48	20	60	1020	Roller	WGR6RBM20

WRP, WTP, WPS & WBS Series

A range of rubber tyred wheels suitable for a wide range of uses.

WRP/WTP Series

Standard: Grey rubber tyre grey plastic centre.

Antistatic: Black rubber tyre, black plastic centre.

Antistatic wheels conform to BS2099.

Wheel Dia. (mm)	Tread Width (mm)	Bore Size (mm)	Hub Length (mm)	Load Cap. (kg)	Bearing Type	Catalogue Reference
Standard Wheels						
41	19	6.4	21	16	Plain	WTP158
50	19	6.4	21	23	Plain	WRP234
63	22	6.4	24	34	Plain	WRP2578
75	22	8.4	27	45	Plain	WRP378
100	22	8.4	27	50	Plain	WRP478
Antistatic Wheels						
75	22	8.4	27	22	Plain	WRP378A
100	22	8.4	27	25	Plain	WRP478A

WPS Series
100 & 125mm Sizes

Grey rubber tyre, grey plastic centre.

WPS Antistatic: Black rubber tyre, black plastic centre.

Wheel Dia. (mm)	Tread Width (mm)	Bore Size (mm)	Hub Length (mm)	Load Cap. (kg)	Bearing Type	Catalogue Reference
Standard Wheels						
100	35	12	40	70	Plain	WPS41WM12
100	35	12	40	70	Roller	WPS41RBWM12
100	35	12	40	70	Plain	WPS41M12
100	35	12	40	70	Roller	WPS41RBM12
125	35	12	40	90	Plain	WPS51WM12
125	35	12	40	90	Roller	WPS51RBWM12
125	35	12	40	90	Plain	WPS51M12
125	35	12	40	90	Roller	WPS51RBM12

WPS Series Heavy Duty
150 & 200mm Sizes

Rubber tyre, Black plastic centre. Grey rubber tyre, grey plastic centre.

Wheel Dia. (mm)	Tread Width (mm)	Bore Size (mm)	Hub Length (mm)	Load Cap. (kg)	Bearing Type	Catalogue Reference
150	38	20	60	135	Plain	WPS6M20
150	38	20	60	135	Roller	WPS6RBM20
200	50	20	60	205	Plain	WPS8M20
200	50	20	60	205	Roller	WPS8RBM20
200	50	25	50	205	Roller	WPS8LRBM25
200	50	25.4	50	205	Plain	WPS8L
200	50	25.4	50	205	Roller	WPS8LRB

WBS Series Heavy Duty

Rubber tyre, zinc plated steel disc centre.

Wheel Dia. (mm)	Tread Width (mm)	Bore Size (mm)	Hub Length (mm)	Load Cap. (kg)	Bearing Type	Catalogue Reference
160	38	20	60	135	Roller	WBS6RBWM20
160	38	20	60	135	Roller	WBS6RBM20
200	45	20	60	205	Roller	WBS8RBWM20
200	45	20	60	205	Roller	WBS8RBM20
250	60	25	65	295	Roller	WBS10RBM25

BW, EPR, GB, PBW and PD Series Wheels

A range of solid tyred wheels with various centre materials.

BW Series
Black solid rubber tyre with black metal centre.

Wheel Dia		Tread Width (mm)	Bore Size (mm)	Hub Length (mm)	Load Cap. (kg)	Bearing Type	Catalogue Reference
Inches	(mm)						
13	330	70	25.4	63	300	Roller	BWR33025.4/63RIBBLK
13	330	70	25.4	83	300	Ball Journal	BWB33025.4/83RIBBLK
14	355	75	25.4	66	400	Plain	BWG35525.4/66RIBBLK
14	355	75	25.4	63	400	Roller	BWR35525.4/63RIBBLK
14	355	75	25.4	83	400	Ball Journal	BWB35525.4/83RIBBLK
16	400	90	25.4	66	500	Plain	BWL40025.4/66RIBBLK
16	400	90	25.4	66	500	Plain	BWG40025.4/66RIBBLK
16	400	90	25.4	63	500	Roller	BWR40025.4/63RIBBLK
16	400	90	25.4	83	500	Ball Journal	BWB40025.4/83RIBBLK
18	450	115	30	75	1100	Ball Journal	BWB45030/75RIBWHITE

EPR Series
Black solid rubber tyre with a polypropylene centre.

Wheel Dia		Tread Width (mm)	Bore Size (mm)	Hub Length (mm)	Load Cap. (kg)	Bearing Type	Catalogue Reference
Inches	(mm)						
6.25	160	40	20	51	150	Plain	671 162 2000 RED
6.25	160	40	25.4	51	150	Plain	671 162 2600 RED
7	180	47	25.4	51	175	Plain	671 180 2600 RED
8	200	50	25.4	51	200	Plain	671 201 2600 RED
10	250	60	25.4	51	275	Plain	671 250 2600 RED

GB Series
Black solid rubber tyre with red polypropylene centre.

Wheel Dia		Tread Width (mm)	Bore Size (mm)	Hub Length (mm)	Load Cap. (kg)	Bearing Type	Catalogue Reference
Inches	(mm)						
10.25	260	95	25.4	59	125	Plain	GB26025.4/59RED
10.5	268	57	25.4	51	125	Plain	GB27525.4/51RED
12	300	55	25.4	59	150	Plain	GB30025.4/59RED

PBW Series
Black solid rubber tyre with a polypropylene centre.

Wheel Dia		Tread Width (mm)	Bore Size (mm)	Hub Length (mm)	Load Cap. (kg)	Bearing Type	Catalogue Reference
Inches	(mm)						
11	280	80	25.4	66	250	Plain	PBW28025.4/66RIBRED
14	355	75	25.4	66	300	Plain	PBW35525.4/66RIBBLK

PD Series
Black solid rubber tyre with polypropylene centre and red cap.

Wheel Dia		Tread Width (mm)	Bore Size (mm)	Hub Length (mm)	Load Cap. (kg)	Bearing Type	Catalogue Reference
Inches	(mm)						
5	125	35	12.7	38	30	Plain	PD12512.7/38
6	150	38	12.7	38	50	Plain	PD15012.7/38
7	180	45	12.7	38	50	Plain	PD18012.7/38
8	200	45	12.7	38	50	Plain	PD20012.7/38

Pneumatic Tyred Wheels

A range of rugged pneumatic tyred wheels.

Pneumatic Tyred Wheels

PW Series
Pneumatic 4Ply tyre with Polypropylene centre.

Wheel Dia		Tread Width (mm)	Bore Size (mm)	Hub Length (mm)	Load Cap. (mm)	Bearing Type	Catalogue Reference
Inches	(mm)						
8.75	220	65	25.4	75	100	Plain	PW250-425.4/754/51R
8.75	220	65	25.4	75	100	Roller	PWR250-425.4/754/51R
10.5	260	82	25.4	75	120	Plain	PW300-425.4/754/52R
10.5	260	85	25.4	75	120	Roller	PWR300-425.4/754/52B
12	300	100	25.4	75	150	Roller	PWR400-425.4/754/52R

BW Series
Pneumatic 4Ply tyre with black or red metal centre.

Wheel Dia		Tread Width (mm)	Bore Size (mm)	Hub Length (mm)	Load Cap. (kg)	Bearing Type	Catalogue Reference
Inches	(mm)						
8.75	220	65	25.4	66	100	Roller	BWR250-425.4/664/51R
10.5	260	85	25.4	66	170	Plain	BWG300-425.4/664/52R
10.5	260	85	25.4	66	170	Roller	BWR300-425.4/664/52R
12	300	100	25.4	66	245	Roller	BWR400-425.4/664/52B
16	400	100	25.4	63	305	Roller	BWR400-825.4/634/01B
16	400	100	25.4	83	305	Ball Journal	BWB400-825.4/834/01B

WAT Series
Heavy Duty

Pneumatic rubber tyre, zinc plated steel disc centre.

Wheel Dia. (mm)	Tread Width (mm)	Bore Size (mm)	Hub Length (mm)	Load Cap. (kg)	Bearing Type	Catalogue Reference
Black Tyre						
196	48	20	60	75	Roller	WAT8RBM20
Grey Tyre						
196	48	20	60	75	Roller	WAT8RBWM20

NSSR, DVR, EAB, PCB and ET Wheels

NSS Series
Black solid rubber tyre with a black metal centre.

Wheel Dia		Tread Width (mm)	Bore Size (mm)	Hub Length (mm)	Load Cap. (kg)	Bearing Type	Catalogue Reference
Inches	(mm)						
6	160	40	25.4	51	175	Plain	NSS6
6	160	40	25.4	51	175	Roller	NSS6R
7	180	50	25.4	51	200	Plain	NSS7
7	180	50	254	51	200	Roller	NSS7R
8	200	50	25.4	51	250	Plain	NSS8
8	200	50	25.4	51	250	Roller	NSS8R
10	250	50	25	51	350	Roller	NSS10R25
10	250	50	25.4	51	350	Roller	NSS10R
12	300	50	25	51	400	Roller	NSS12R25
12	300	50	25.4	51	400	Roller	NSS12R

DVR Series
Black rubber tyre with a pressed steel centre.

Wheel Dia. (mm)	Tread Width (mm)	Bore Size (mm)	Hub Length (mm)	Load Cap. (kg)	Bearing Type	Catalogue Reference
100	30	12	37.8	70	Roller	DVR1003012
125	37	12	44.4	100	Roller	DVR1253712
160	40	20	58	150	Roller	AW160RMB
200	50	20	58	205	Roller	AW200RMB

EAB Series
Black elastic rubber tyre with an aluminium centre.

Wheel Dia. (mm)	Tread Width (mm)	Bore Size (mm)	Hub Length (mm)	Load Cap. (kg)	Bearing Type	Catalogue Reference
100	40	15	40	160	Ball Journal	AW100EAB
125	50	20	60	225	Ball Journal	AW125EAB5020
160	50	20	60	300	Ball Journal	AW160EAB
200	50	20	60	400	Ball Journal	AW200EAB

PCB Series
Cast grade Polyurethane tyre with cast iron centre.
Other sizes and capacities are available - call Sales with your requirements.

Wheel Dia. (mm)	Tread Width (mm)	Bore Size (mm)	Hub Length (mm)	Load Cap. (kg)	Bearing Type	Catalogue Reference
100	40	20	40	300	Ball Journal	AW100PCB
125	40	20	40	400	Ball Journal	AW125PCB
150	50	20	60	800	Ball Journal	AW150PCB
200	50	20	60	1100	Ball Journal	AW200PCB
250	60	25	60	1400	Ball Journal	AW250PCB

ET Series: *Econothane*
Polyurethane tyre on Aluminium Wheel

Wheel Dia. (mm)	Tread Width (mm)	Bore Size (mm)	Hub Length (mm)	Load Cap. (kg)	Bearing Type	Catalogue Reference
100	50	20	60	300	Ball Journal	100ET5060
125	50	20	60	450	Ball Journal	125ET5060
150	50	20	60	550	Ball Journal	150ET5060
200	50	20	60	800	Ball Journal	200ET5060
250	50	20	60	1000	Ball Journal	250ET5060

RU and WRT Series Wheels

RU Series

Black rubber tyre on a cast iron centre. Quiet running, these wheels are floor friendly, have good load capacities and are able to withstand reasonably rough service conditions.

Special Tyres

Special oil resisting or antistatic tyres can be moulded to many sizes. Load capacities will be affected. Please contact Technical sales for further information.

Wheel Dia. (mm)	Tread Width (mm)	Bearing Bore Size (mm)	Hub Length (mm)	Load Cap. (kg)	Bearing Type	Catalogue Reference
50	19	8	24	41	Plain	050RU02
63	25	10	30	70	Plain	063RU03
75	19	10	24	41	Plain	075RU02
75	25	10	30	70	Plain	075RU03
75	32	12	45	80	Plain	075RU04
100	19	10	25	43	Plain	100RU02
100	35	12	45	135	Plain	100RU04
100	38	20	60	150	Roller	100RU1H
125	38	12	45	160	Plain	125RU04
125	38	12	45	160	Roller	125RU14
125	40	20	60	170	Plain	125RU0G
125	40	20	60	170	Roller	125RU1H
125	40	20	49	170	Ball Journal	125RU2H
150	45	20	60	370	Plain	150RU05
150	45	20	60	370	Roller	150RU15
150	45	25	60	370	Roller	150RU1A
150	40	20	49	370	Ball Journal	150RU2H
200	45	25	50	480	Plain	200RU0A
200	50	20	60	535	Plain	200RU05
200	50	20	60	535	Roller	200RU15
200	50	20	49	535	Ball Journal	200RU2H
200	50	25	60	535	Roller	200RU1A
250	54	25	57	615	Ball Journal	250RU2H
250	54	25	60	615	Roller	250RU1H
250	75	19	89	1020	Taper Roller	250RUTT
250	75	25	78	1020	Ball Journal	250RU2P
250	75	30	76	1020	Ball Journal	250RU2Q
300	54	25	57	680	Ball Journal	300RU2H
300	54	25	60	680	Roller	300RU1H
300	75	31.7	83	1020	Roller	300RURA
300	75	25	78	1020	Ball Journal	300RU2P
300	75	30	76	1020	Ball Journal	300RU2Q
350	75	31.7	83	1360	Roller	350RURA
350	75	25	78	1360	Ball Journal	350RU2P
350	75	30	76	1360	Ball Journal	350RU2Q
400	100	25.4	115	1700	Taper Roller	400RUTT
400	100	38.1	115	1700	Taper Roller	400RUTA
400	100	35	104	1700	Ball Journal	400RU2A

Wheel Dia. (mm)	Tread Width (mm)	Bore Size (mm)	Hub Length (mm)	Load Cap. (kg)	Bearing Type	Catalogue Reference
100	43	15	48	160	Roller	WRT4RBM15
125	38	15	48	180	Plain	WRT5M15
125	38	15	48	180	Roller	WRT5RBM15
150	45	20	60	400	Plain	WRT6M20
150	45	20	60	400	Roller	WRT6RBM20
150	45	25	60	400	Roller	WRT6RBM25
150	45	25.4	60	400	Plain	WRT6L
150	45	25.4	60	400	Roller	WRT6LRB
200	51	20	60	585	Plain	WRT8M20
200	51	20	60	585	Roller	WRT8RBM20
200	51	25	60	585	Roller	WRT8RBM25
200	51	25.4	60	585	Plain	WRT8L
200	51	25.4	60	585	Plain	WRT8LRB
250	51	25	60	680	Roller	WRT10RBM25
250	51	25.4	60	680	Roller	WRT10RB
250	51	31.8	60	680	Roller	WRT10LRB
300	57	25	60	750	Roller	WRT12RBM25
300	57	25.4	60	750	Roller	WRT12RB
300	57	31.8	60	750	Roller	WRT12LRB
300	102	31.8	118	2000	Taper	WRT312TM40

WRT Series Heavy Duty

Black rubber tyre, black cast iron centre.

NB. Ball journal bearings are available in a selection of bore sizes in 150mm, 200mm and 250mm sized wheels - call for details.

GR, RL and DR Series Wheels

GR Series

Green abrasion resistant elastic rubber 'quieter running' tyre mounted on a fluted aluminium centre. See note on headed spacers. These wheels are suitable for power towing up to 6kph.

Wheel Dia. (mm)	Tread Width (mm)	Bore Size (mm)	Hub Length (mm)	Load Cap. (kg)	Bearing Type	Catalogue Reference
125	42	12	60	200	Ball Journal	125GR2H
160	42	12	60	300	Ball Journal	160GR2H
200	42	12	60	400	Ball Journal	200GR2H

RL Series

Grey rubber tyre with a Grey plastic centre. Quiet running, these wheels are kinder to floors, hygienic and attractive.

Wheel Dia. (mm)	Tread Width (mm)	Bore Size (mm)	Hub Length (mm)	Load Cap. (kg)	Bearing Type	Catalogue Reference
40	17	8	20	14	Plain	040RL01
50	17	8	20	14	Plain	050RL01
50	18	8	21	35	Plain	050RL02
63	18	8	20	16	Plain	063RL01
63	25	10	30	30	Plain	063RL03
75	20	10	24	36	Plain	075RL02
75	25	10	30	40	Plain	075RL03
100	20	10	24	41	Plain	100RL02
100	25	10	30	50	Plain	100RL03

DR Series

Black demountable rubber tyre, Cast iron centre. The rubber tyres are thick section wire braced. Durable, resilient and suitable for power towing applications.

Wheel Dia. (mm)	Tread Width (mm)	Bore Size (mm)	Hub Length (mm)	Load Cap. (kg)		Bearing Type	Catalogue Reference
				Speed	(kg)		
200	75	25	88	6kph 10 kph 16 kph 20 kph	500 400 300 250	Ball Journal	200DR2X
250	80	25	88	6kph 10 kph 16 kph 20 kph	675 540 410 340	Ball Journal	250DR2X
300	85	25	88	6kph 10 kph 16 kph 20 kph	800 640 480 400	Ball Journal	300DR2X

Headed Spacers

Where ball journal wheels are to be fitted into castor assemblies a pair of headed spacer bushes will be required to sleeve the bore and increase the hub width to match the castor frame and axle bolt. Call Technical sales for details.

WA Series

A range of single flanged, radiused tread steel wheels fitted into a steel stub axle. These fit within standard sections of channel and 'I' beams. The radiused tread accomodates the angle of the section and improves wear and tracking characteristics. Operating Temperatures of -30C to+120C.
Wheels are manufactured from steel to BS970 Part1: 1983:080M40, Axles to BS970 Part1: 1983:606M36. Load ratings from 160kg to 1500kg. When shock loadings are to be withstood by this range the 'maximum' load rating should be reduced by a shock loading factor 0.7.

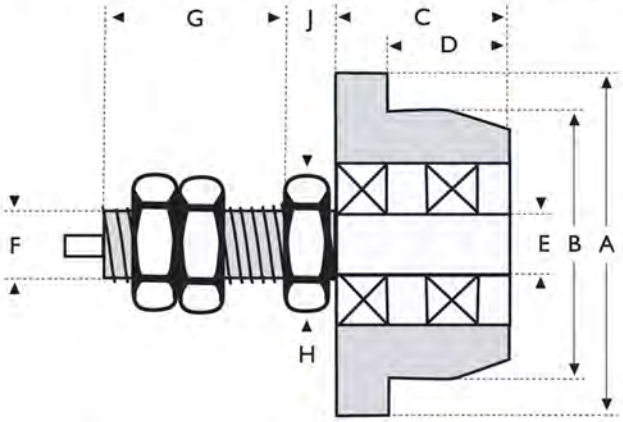

Axial Load (kg)	Dimensions (mm)									Catalogue Reference
	A	B	C	D	E	F	G	H	J	
160	70	55	35	25	12	M16	40	22	10	55WA
370	100	85	35	25	20	M24	52	30	15	85WA
700	125	105	35	25	25	M24	62	32	15	105WA
1000	160	133	47	35	25	M30	63	36	18	133WA
1500	200	175	50	35	30	M36	73	46	20	175WA

SSF Series

Single flange wheels manufactured from steel with a tensile strength of approx. 660N/mm. Designed to be used in pairs on common axles to run on parallel rails. Performance will depend upon in the correct selection of rail width and running clearances. Flanges should be inside the rails and a 6mm clearance should be allowed between each flange and mating rail. Load ratings of 970kg to 33600kg based on full tread width being used. Alternative bore / bearing diameters, alternative bearing types and technical information on rolling resistance coefficients and dimensions available on request.

Tread Dia. (mm)	Tread Width (mm)	Flange Dia. (mm)	Overall Width (mm)	Axle Dia. (mm)	Catalogue Reference					
					Max Load (kg)	Ball Journal Bearing	Max Load (kg)	Taper Roller Bearing	Max Load (kg)	Keywayed
100	25	125	37	20	970	SSF100/25/BJM20	-	n/a	1400	SSF100/25/KM20
150	40	190	55	25	1140	SSF150/40/BJM25	-	n/a	3300	SSF150/40/KM25
200	55	240	70	30	2040	SSF200/55/BJM30	5200	SSF200/55/TBM30	6100	SSF200/55/KM30
300	60	345	80	40	3348	SSF300/60/BJM40	-	n/a	10000	SSF300/60/KM40
350	60	395	80	50	7340	SSF350/60/BJM50	10600	SSF350/60/TBM50	11700	SSF350/60/KM50
400	70	450	100	60	-	n/a	13350	SSF400/70/TBM60	15600	SSF400/70/KM60
450	95	495	125	75	-	n/a	20400	SSF450/95/TBM75	24000	SSF450/95/KM75
600	100	660	130	100	-	n/a	30580	SSF600/100/TBM100	33600	SSF600/100/KM100

CI and ST Series Wheels

A range of heavy duty cast iron and steel wheels for demanding and industrial uses. Where these wheels are fitted into castor assemblies, the wheel load capacity may exceed that of the castor. Load rating must then be downrated to the maximum rating shown in the castor assembly table.

CI Series Heavy Duty

Cast iron wheels combine strength and shock resistance with long life and economy. They have very low tractive resistance and are a first choice where ease of movement is required. Being metallic they will withstand extremes of temperature that would destroy plastic or tyred wheels.

Wheel Dia. (mm)	Tread Width (mm)	Bearing Bore Size (mm)	Hub Length (mm)	Load Cap. (kg)	Bearing Type	Catalogue Reference
63	25	10	30	130	Plain	063CI03
75	25	10	30	135	Plain	075CI03
75	34	12	45	190	Plain	075CI04
75	34	12	45	190	Roller	075CI14
100	38	12	45	250	Plain	100CI04
100	38	12	45	250	Roller	100CI14
100	45	20	60	320	Plain	100CI0G
100	45	20	60	320	Roller	100CI1H
100	45	20	49	320	Ball Journal	100CI2H
125	38	12	45	500	Plain	125CI04
125	38	12	45	295	Roller	125CI14
125	45	20	60	630	Plain	125CI0G
125	45	20	60	630	Roller	125CI1H
125	45	20	49	630	Ball Journal	125CI2H
150	45	20	60	1000	Plain	150CI05
150	45	20	60	1000	Roller	150CI15
150	45	20	49	1000	Ball Journal	150CI2H
150	45	25	60	1000	Roller	150CI1A
200	45	20	60	730	Plain	200CI05
200	45	20	60	1150	Roller	200CI15
200	45	25	60	1150	Roller	200CI1A
200	45	20	49	1150	Ball Journal	200CI2H
200	63	38.1	70	2270	Plain	200CIPT
250	54	25	60	1240	Roller	250CI1H
250	54	25	57	1240	Ball Journal	250CI2H
250	63	38.1	70	2270	Plain	250CIPT

Cast iron wheels can cause floor wear and noise. They will also rust like all ferrous metals. Cast iron is a good choice as a basic wheel used primarily where rough service conditions prevail.

ST Series Heavy Duty

Solid steel wheels machined from mild steel blanks for the toughest applications. Clear resin shellac painted.

Wheel Dia. (mm)	Tread Width (mm)	Bearing Bore Size (mm)	Hub Length (mm)	Load Cap. (kg)	Bearing Type	Catalogue Reference
50	14	12	17	134	Plain	050ST0L
150	50	20	48.3	1130	Ball Journal	150ST2H
150	55	31.7	53	2000	Taper Roller	150STTP
150	63	31.7	61	2270	Taper Roller	150STTT
200	55	31.7	55	2500	Taper Roller	200STTP
200	85	50	81	5080	Taper Roller	200ST3T

Headed Spacers

Where ball journal wheels are to be fitted into castor assemblies a pair of headed spacer bushes will be required to sleeve the bore and increase the hub width to match the castor frame and axle bolt. Call Technical sales for details.

Technical Sales: **Tel: 0115 9786 004 Fax: 0115 9422 919**

Email: sales@reidsofnottingham.co.uk www.reidsofnottingham.co.uk

CV and CF Series Wheels

A range of special application cast iron wheels for use on rails or on inverted angle iron track. Manufactured from close grained castings of grey iron material, sometimes described as 'semi-steel' to BSEN1561. These wheels combine strength and shock resistance with long life economy. Able to withstand extremes of temperature. Load capacities to 1150kg.

CV Series Heavy Duty

V grooved cast iron wheel.
Groove angle 92°. Clear resin shellac painted.

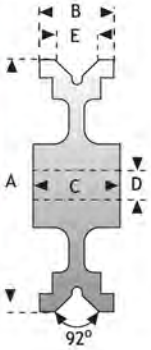

Wheel Dia. (mm) A	Tread Width (mm) B	Flange Groove (mm) E	Bearing Bore Size (mm) D	Hub Length (mm) C	Load Cap. (kg)	Bearing Type	Catalogue Reference
75	35	21	19	45	205	Roller	075CVRA
75	37	25	20	60	225	Roller	075CV1B
100	46	25	20	60	300	Roller	100CV1H
100	46	25	20	57	300	Ball Journal	100CV2H
125	38	20	20	60	300	Roller	125CV1H
125	38	20	20	57	300	Ball Journal	125CV2H
150	45	32	25	60	1000	Roller	150CV1H
150	45	32	20	57	1000	Ball Journal	150CV2H
200	45	32	25	60	1000	Roller	200CV1H
200	45	32	20	57	1000	Ball Journal	200CV2H

CV Series Heavy Duty Parallel Tread

Single Flange cast iron wheel. 90° angle flange. Clear resin shellac painted.

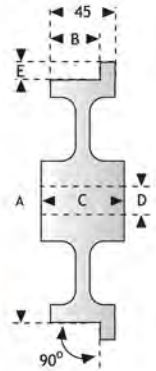

Parallel Tread

Wheel Dia. (mm) A	Tread Width (mm) B	Flange Groove (mm) E	Bearing Bore Size (mm) D	Hub Length (mm) C	Load Cap. (kg)	Bearing Type	Catalogue Reference
100	29	14	20	60	800	Roller	100CF1H
100	29	14	20	57	800	Ball Journal	100CF2H
125	40	14	20	60	900	Roller	125CF1H
125	40	14	20	57	900	Ball Journal	125CF2H
150	35	14	20	60	1000	Roller	150CF1H
150	35	14	20	57	1000	Ball Journal	150CF2H
200	40	14	20	60	1150	Roller	200CF1H
200	40	14	20	57	1150	Ball Journal	200CF2H

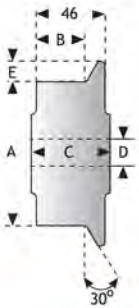

CV Series Heavy Duty Taper Tread

Single Flange cast iron wheel.
30° angle flange.
Clear resin shellac painted.

Taper Tread

Wheel Dia. (mm) A	Tread Width (mm) B	Flange Groove (mm) E	Bearing Bore Size (mm) D	Hub Length (mm) C	Load Cap. (kg)	Bearing Type	Catalogue Reference
100	35	15	20	60	800	Plain	100CF1A
100	35	15	20	57	800	Ball Journal	100CF2A
125	40	15	20	60	900	Plain	125CF1A
125	40	15	20	57	900	Ball Journal	125CF2A
150	35	15	20	60	1000	Plain	150CF1A
150	35	15	25	60	1000	Plain	150CF1C
150	35	15	20	57	1000	Ball Journal	150CF2A
200	40	15	20	60	1150	Plain	200CF1A
200	40	15	25	60	1150	Plain	200CF1C
200	40	15	20	57	1150	Ball Journal	200CF2A

Where applications include continuous or frequent movement, especially where combined with heavy loads, we recommend the use of the *Ball Journal bearings*.

KR Series

A comprehensive range of polyurethane and nylon rollers. Alterative bore sizes of 17mm and 25mm are also available, as are headed spacers.

KR Polyurethane

Steel tube core coated with hardwearing A95 shore hardness Polyurethane.

A Roller Dia. (mm)	B (mm)	C (mm)	D (mm)	E (mm)	Load Capacity (kg)	Catalogue Reference	
						With Bearing	Without Bearing
82	60	47	14	20	500	KR8260PTB	KR8260PT
82	70	47	14	20	600	KR8270PTB	KR8270PT
82	80	47	14	20	700	KR8280PTB	KR8280PT
82	90	47	14	20	800	KR8290PTB	KR8290PT
82	100	47	14	20	900	KR82100PTB	KR82100PT
85	60	47	14	20	500	KR8560PTB	KR8560PT
85	70	47	14	20	600	KR8570PTB	KR8570PT
85	80	47	14	20	700	KR8580PTB	KR8580PT
85	90	47	14	20	800	KR8590PTB	KR8590PT
85	100	47	14	20	900	KR85100PTB	KR85100PT
85	110	47	14	20	1000	KR85110PTB	KR85110PT

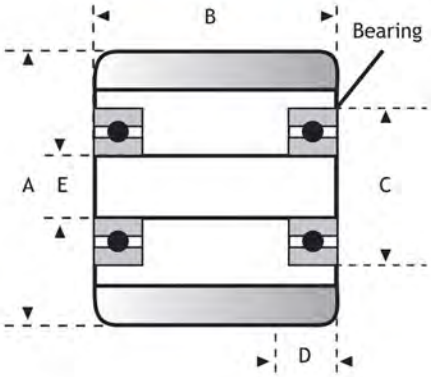

KR Nylon

Monolithic first quality Nylon 6.

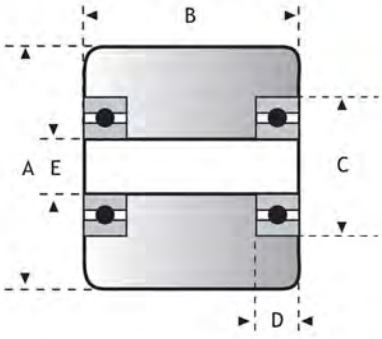

A Roller Dia. (mm)	B (mm)	C (mm)	D (mm)	E (mm)	Load Capacity (kg)	Catalogue Reference	
						With Bearing	Without Bearing
82	70	47	14	20	600	KR8270NYB	KR8270NY
82	80	47	14	20	680	KR8280NYB	KR8280NY
82	90	47	14	20	775	KR8290NYB	KR8290NY
82	100	47	14	20	900	KR82100NYB	KR82100NY
85	70	47	14	20	600	KR8570NYB	KR8570NY
85	80	47	14	20	700	KR8580NYB	KR8580NY
85	90	47	14	20	800	KR8590NYB	KR8590NY
85	100	47	14	20	900	KR85100NYB	KR85100NY

WSU Series

Flexello superthane polyurethane wheels combine the load capacity and wear resistance of cast iron with all the advantages of a soft resilient tread. High load capacity is coupled with a comparatively low tractive resistance.

The tear strength is two to five time greater than that of natural rubber and the high abrasion resistance ensures a useable life 10 time that of rubber.

WSU Series Heavy Duty wheels with Roller and Taper Roller Bearings

Red polyurethane tyre, red cast iron centre.

Wheel Dia. (mm)	Tread Width (mm)	Bore Size (mm)	Hub Length (mm)	Load Cap. (kg)	Bearing Type	Catalogue Reference
75	29	12	39	150	Plain	WSU3M12
100	43	15	48	295	Roller	WSU4RBM15
125	35	15	48	325	Roller	WSU5RBM15
125	35	25	50	325	Roller	WSU5RBM25
125	35	25.4	50	325	Roller	WSU5LRB
150	38	20	60	600	Roller	WSU61RBM20
150	45	20	60	725	Roller	WSU6RBM20
150	45	12.7	62	725	Taper Roller	WSU6TM*
150	45	25	60	725	Roller	WSU6RBM25
150	45	25.4	60	725	Roller	WSU6LRB
200	51	20	60	1045	Roller	WSU8RBM20
200	51	12.7	62	1045	Taper Roller	WSU8TM*
200	51	25	60	1045	Roller	WSU8RBM25
200	51	25.4	60	1045	Roller	WSU8LRB
200	76	12.7	106	1270	Taper Roller	WSU83TM*
200	76	19.1	92	1270	Taper Roller	WSU108TM
250	51	12.7	62	1135	Taper Roller	WSU10TM*
250	51	25	60	1135	Roller	WSU10RBM25
250	51	25.4	60	1135	Roller	WSU10RB
250	51	31.8	60	1135	Roller	WSU10LRB
250	76	12.7	106	2270	Taper Roller	WSU103TM*
250	76	19.1	92	2270	Taper Roller	WSU110TM
250	76	31.8	92	2950	Taper Roller	WSU210TM
250	76	38.1	95	2950	Roller	WSU210RB
300	57	12.7	62	1270	Taper Roller	WSU12TM*
300	57	25	60	1270	Roller	WSU12RBM25
300	57	25.4	60	1270	Roller	WSU12RB
300	57	31.8	60	1270	Roller	WSU12LRB
300	76	31.8	92	2950	Taper Roller	WSU212TM
300	76	38.1	95	2950	Roller	WSU212RB
300	102	31.8	118	4080	Taper Roller	WSU312TM
400	127	34.9	143	6120	Taper Roller	WSU516TM

Conversion mm/ins : 12.7 = $^1/_2$, 19.1 = $^3/_4$, 25.4 = 1, 31.8 = $1^1/_4$, 38.1 = $1^1/_2$, 34.9 = $1^3/_8$.

* These wheels are fitted with taper roller bearings for use in KV, KVF (and possibly GT and GTF) castors and have axle tubes to reduce the bore from the 3/4@ of the inner component of the taper roller bearing to the 12mm diameter of the high tensile axle bolt used on all KV and KVF series castors.

The axle tubes are threaded at each end and fitted with thin adjusting nuts, which are screwed up finger tight during manufacture. When fitting these wheels into castors it is vitally important that the adjusting nuts are "backed off" slightly to the point when, with the 12mm HT bolt fully tightened, the wheel has just perceptible sideways 'play'. Until the knack of correct adjustment is acquired it may take several steps to achieve the correct amount of 'play'.

NB. Wheels with a suffix TM which are not identified with an * are for use in EH and EHF series castors. They are supplied with taper roller bearing cups ready fitted, and with the cones, seals and washers loose. It is vitally important to provide means of fine bearing adjustment to give just perceptible sideways 'play'. 'Preload' or excessive clearance will inevitably result in bearing failure.

As these wheels are designed for use on axles supported in castor forks both ends, they will not be able to carry their full rated weights if they are mounted on cantilever axles.

WSU Series Heavy Duty wheels with Ball Journal Bearings

Red polyurethane tyre, red cast iron centre.

Wheel Dia. (mm)	Tread Width (mm)	Bore Size (mm)	Hub Length (mm)	Load Cap. (kg)	Bearing Type	Catalogue Reference
150	45	12	61	725	Ball Journal	WSU6BJM12
150	45	20	57	725	Ball Journal	WSU6BJM20
150	45	25	57	725	Ball Journal	WSU6BJM25
200	51	12	61	1045	Ball Journal	WSU8BJM12
200	51	20	57	1045	Ball Journal	WSU8BJM20
200	51	25	57	1045	Ball Journal	WSU8BJM25
200	76	25	92	1270	Ball Journal	WSU83BJM25
250	51	12	61	1135	Ball Journal	WSU10BJM12
250	51	25	57	1135	Ball Journal	WSU10BJM25
300	57	12	61	1270	Ball Journal	WSU12BJM12
300	57	25	57	1270	Ball Journal	WSU12BJM25

PT Designer Series Wheels

Aimed at offering the design engineer an urivalled choice, this range of high performance cast iron wheels with vulkollan polyurethane tyres offer specific boundary dimensions into which can be incorperated bearings, bores or keyways as required.
Vulkollan is unsurpassed as a polyurethane elastomer for wheels in conveyer and transportation systems, offering high load bearing capacity, minimal build up of heat and high abrasion resistance.

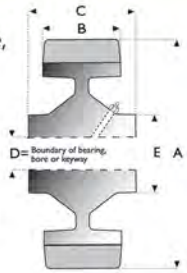

Wheel Dia. (mm)	Tread Width (mm/ins)	Load Cap. (kg)	Axle Bore (mm/ins)	Dimensions (mm)					Catalogue Reference		
				A	B	C	D	E	Plain Bore	Plain Bore Keywayed	Ball Bearing
75	35	300	12mm	75	35	35	48	55	075 35 PTO 12	075 35 PTU 12	075 35 PT2 12
75	35	300	20mm	75	35	35	48	55	075 35 PTO 20	075 35 PTU 20	075 35 PT2 20
75	35	300	25mm	75	35	35	48	55	075 35 PTO 25	075 35 PTU 25	n/a
75	35	300	30mm	75	35	35	48	55	075 35 PTO 30	075 35 PTU 30	n/a
75	35	300	0.5ins	75	35	35	48	55	075 35 PTP 0.5	075 35 PTV 0.50	075 35 PTJ 0.50
75	35	300	0.75ins	75	35	35	48	55	075 35 PTP 0.75	075 35 PTV 0.75	075 35 PTJ 0.75
75	35	300	1.00ins	75	35	35	48	55	075 35 PTP 1.00	075 35 PTV 1.00	n/a
75	35	300	1.25ins	75	35	35	48	55	075 35 PTP 1.25	075 35 PTV 1.25	n/a
100	40	500	12mm	100	40	45	48	57	100 40 PTO 12	100 40 PTU 12	100 40 PT2 12
100	40	500	20mm	100	40	45	48	57	100 40 PTO 20	100 40 PTU 20	100 40 PT2 20
100	40	500	25mm	100	40	45	48	57	100 40 PTO 25	100 40 PTU 25	100 40 PT2 25
100	40	500	30mm	100	40	45	48	57	100 40 PTO 30	100 40 PTU 30	n/a
100	40	500	35mm	100	40	45	48	57	100 40 PTO 35	100 40 PTU 35	n/a
100	40	500	0.50ins	100	40	45	48	57	100 40 PTP 0.5	100 40 PTV 0.50	100 40 PTJ 0.50
100	40	500	0.75ins	100	40	45	48	57	100 40 PTP 0.75	100 40 PTV 0.75	100 40 PTJ 0.75
100	40	500	1.00ins	100	40	45	48	57	100 40 PTP 1.00	100 40 PTV 1.00	100 40 PTJ 1.00
100	40	500	1.25ins	100	40	45	48	57	100 40 PTP 1.25	100 40 PTV 1.25	n/a
100	40	500	1.50ins	100	40	45	48	57	100 40 PTP 1.50	100 40 PTV 1.50	n/a
125	30	500	20mm	125	30	35	48	55	125 30 PTO 20	125 30 PTU 20	125 30 PT2 20
125	30	500	25mm	125	30	35	48	55	125 30 PTO 25	125 30 PTU 25	125 30 PT2 25
125	30	500	30mm	125	30	35	48	55	125 30 PTO 30	125 30 PTU 30	n/a
125	30	500	35mm	125	30	35	48	55	125 30 PTO 35	125 30 PTU 35	n/a
125	30	500	0.75ins	125	30	35	48	55	125 30 PTP 0.75	125 30 PTV 0.75	125 30 PTJ 0.75
125	30	500	1.00ins	125	30	35	48	55	125 30 PTP 1.00	125 30 PTV 1.00	125 30 PTJ 1.00
125	30	500	1.25ins	125	30	35	48	55	125 30 PTP 1.25	125 30 PTV 1.25	n/a
125	30	500	1.50ins	125	30	35	48	55	125 30 PTP 1.50	125 30 PTV 1.50	n/a
125	45	600	25mm	125	45	50	48	55	125 45 PTO 25	125 45 PTU 25	125 45 PT2 25
125	45	600	30mm	125	45	50	48	55	125 45 PTO 30	125 45 PTU 30	n/a
125	45	600	35mm	125	45	50	48	55	125 45 PTO 35	125 45 PTU 35	n/a
125	45	600	1.00ins	125	45	50	48	55	125 45 PTP 1.00	125 45 PTV 1.00	125 45 PTJ 1.00
125	45	600	1.25ins	125	45	50	48	55	125 45 PTP 1.25	125 45 PTV 1.25	n/a
125	45	600	1.50ins	125	45	50	48	55	125 45 PTP 1.50	125 45 PTV 1.50	n/a
150	35	700	20mm	150	35	40	50	60	150 35 PTO 20	150 35 PTU 20	150 35 PT2 20
150	35	700	25mm	150	35	40	50	60	150 35 PTO 25	150 35 PTU 25	150 35 PT2 25
150	35	700	30mm	150	35	40	50	60	150 35 PTO 30	150 35 PTU 30	n/a
150	35	700	0.75ins	150	35	40	50	60	150 35 PTO 0.75	150 35 PTV 0.75	150 35 PTJ 0.75
150	35	700	1.00ins	150	35	40	50	60	150 35 PTP 1.00	150 35 PTV 1.00	150 35 PTJ 1.00
150	35	700	1.25ins	150	35	40	50	60	150 35 PTP 1.25	150 35 PTV 1.25	n/a

PT 'Designer' Series Selection Note

Stated wheel loadings are for operation under ideal conditions, i.e., the wheel operates infrequently on a smooth surface without axial loading. Wheel loading must be reduced as follows for any of the following conditions:

Frequent Use - In use for more than 45 minutes continuous operation, reduce loadings by 25%

Driving Applications - Reduce loadings by 30%. Speeds of 6 - 10kph - Reduce loadings by 20% Speeds of 10 - 16kph reduce loadings by 30%. Reductions are cumulative if more than one condition exists.

Wheel Dia. (mm)	Tread Width (mm/ins)	Load Cap. (kg)	Axle Bore (mm/ins)	Dimensions (mm)					Catalogue Reference			
				A	B	C	D	E	Plain Bore	Plain Bore Keywayed	Ball Bearing	Taper Roller Bearing
150	50	900	25mm	150	50	55	52	65	150 50 PT0 25	150 50 PTU 25	150 50 PT2 25	150 50 PT3 25
150	50	900	30mm	150	50	55	52	65	150 50 PT0 30	150 50 PTU 30	n/a	n/a
150	50	900	35mm	150	50	55	52	65	150 50 PT0 35	150 50 PTU 35	n/a	n/a
150	50	900	1.00ins	150	50	55	52	65	150 50 PTP 1.00	150 50 PTV 1.00	150 50 PTJ 1.00	150 50 PTT 1.00
150	50	900	1.25ins	150	50	55	52	65	150 50 PTP 1.25	150 50 PTV 1.25	n/a	n/a
150	50	900	1.50ins	150	50	55	52	65	150 50 PTP 1.50	150 50 PTV 1.50	n/a	n/a
200	40	1000	25mm	200	40	50	70	80	200 40 PT0 25	200 40 PTU 25	200 40 PT2 25	200 40 PT3 25
200	40	1000	30mm	200	40	50	70	80	200 40 PT0 30	200 40 PTU 30	200 40 PT2 30	200 40 PT3 30
200	40	1000	35mm	200	40	50	70	80	200 40 PT0 35	200 40 PTU 35	n/a	n/a
200	40	1000	40mm	200	40	50	70	80	200 40 PT0 40	200 40 PTU 40	n/a	n/a
200	40	1000	1.00ins	200	40	50	70	80	200 40 PTP 1.00	200 40 PTV 1.00	200 40 PTJ 1.00	200 40 PTT 1.00
200	40	1000	1.25ins	200	40	50	70	80	200 40 PTP 1.25	200 40 PTV 1.25	200 40 PTJ 1.25	200 40 PTT 1.25
200	40	1000	1.50ins	200	40	50	70	80	200 40 PTP 1.50	200 40 PTV 1.50	n/a	n/a
200	60	1300	30mm	200	60	70	70	80	200 60 PT0 30	200 60 PTU 30	200 60 PT2 30	200 60 PT3 30
200	60	1300	35mm	200	60	70	70	80	200 60 PT0 35	200 60 PTU 35	n/a	n/a
200	60	1300	40mm	200	60	70	70	80	200 60 PT0 40	200 60 PTU 40	n/a	n/a
200	60	1300	1.25ins	200	60	70	70	80	200 60 PTP 1.25	200 60 PTV 1.25	200 60 PTV 1.25	200 60 PTT 1.25
200	60	1300	1.50ins	200	60	70	70	80	200 60 PTP 1.50	200 60 PTV 1.50	n/a	200 60 PTT 1.50
250	45	1200	30mm	250	45	55	80	100	250 45 PT0 30	250 45 PTU 30	250 45 PT2 30	250 45 PT3 30
250	45	1200	35mm	250	45	55	80	100	250 45 PT0 35	250 45 PTU 35	n/a	250 45 PT3 35
250	45	1200	40mm	250	45	55	80	100	250 45 PT0 40	250 45 PTU 40	n/a	n/a
250	45	1200	1.25ins	250	45	55	80	100	250 45 PTP 1.25	250 45 PTV 1.25	250 45 PT2 1.25	250 45 PTT 1.25
250	45	1200	1.50ins	250	45	55	80	100	250 45 PTP 1.50	250 45 PTV 1.50	n/a	250 45 PTT 1.50
250	70	2000	30mm	250	70	80	80	100	250 70 PT0 30	250 70 PTU 30	250 70 PT2 30	250 70 PT3 30
250	70	2000	35mm	250	70	80	80	100	250 70 PT0 35	250 70 PTU 35	250 70 PT2 35	250 70 PT3 35
250	70	2000	40mm	250	70	80	80	100	250 70 PT0 40	250 70 PTU 40	n/a	n/a
250	70	2000	50mm	250	70	80	80	100	250 70 PT0 50	250 70 PTU 50	n/a	n/a
250	70	2000	1.25ins	250	70	80	80	100	250 70 PTP 1.25	250 70 PTV 1.25	250 70 PTJ 1.25	250 70 PTT 1.25
250	70	2000	1.50ins	250	70	80	80	100	250 70 PTP 1.50	250 70 PTV 1.50	250 70 PTJ 1.50	n/a
250	70	2000	2.00ins	250	70	80	80	100	250 70 PTP 2.00	250 70 PTV 2.00	n/a	n/a
300	50	1600	30mm	300	50	60	90	115	300 50 PT0 30	300 50 PTU 30	300 50 PT2 30	300 50 PT3 30
300	50	1600	35mm	300	50	60	90	115	300 50 PT0 35	300 50 PTU 35	300 50 PT2 35	300 50 PT3 35
300	50	1600	40mm	300	50	60	90	115	300 50 PT0 40	300 50 PTU 40	n/a	n/a
300	50	1600	50mm	300	50	60	90	115	300 50 PT0 50	300 50 PTU 50	300 50 PTJ 50	n/a
300	50	1600	1.25ins	300	50	60	90	115	300 50 PTP 1.25	300 50 PTV 1.25	n/a	300 50 PTT 1.25
300	50	1600	1.50ins	300	50	60	90	115	300 50 PTP 1.50	300 50 PTV 1.50	n/a	300 50 PTT 1.50
300	50	1600	2.00ins	300	50	60	90	115	300 50 PTP 2.00	300 50 PTV 2.00	n/a	n/a
300	75	2800	35mm	300	75	85	90	115	300 75 PT0 35	300 75 PTU 35	300 75 PT2 35	300 75 PT3 35
300	75	2800	40mm	300	75	85	90	115	300 75 PT0 40	300 75 PTU 40	300 75 PT2 40	300 75 PT3 40
300	75	2800	50mm	300	75	85	90	115	300 75 PT0 50	300 75 PTU 50	n/a	n/a
300	75	2800	60mm	300	75	85	90	115	300 75 PT0 60	300 75 PTU 60	n/a	n/a
300	75	2800	1.25ins	300	75	85	90	115	300 75 PTP 1.25	300 75 PTV 1.25	300 75 PTJ 1.25	300 75 PTT 1.25
300	75	2800	1.50ins	300	75	85	90	115	300 75 PTP 1.50	300 75 PTV 1.50	300 75 PTJ 1.50	300 75 PTT 1.50
300	75	2800	2.00ins	300	75	85	90	115	300 75 PTP 2.00	300 75 PTV 2.00	n/a	n/a

WAN and AS Series Wheels

WAN Series
Heavy Duty

Black reinforced Phenolic resin wheel.

Wheel Dia. (mm)	Tread Width (mm)	Bore Size (mm)	Hub Length (mm)	Load Cap. (kg)	Bearing Type	Catalogue Reference
75	38	12	41	150	Plain	WAN3M12
100	38	15	41	305	Plain	WAN4M15
100	38	14.3	41	305	Roller	WAN4RB
125	38	15	41	395	Plain	WAN5M15
125	38	19.1	56	395	Roller	WAN5RB
150	51	19.1	56	540	Roller	WAN6RB
200	51	19.1	56	725	Roller	WAN8RB

AS Series

Black Antistatic rubber tyre, Yellow cast iron centre. Tyres are clearly labelled ANTISTATIC. The maximum electrical resistance is 10,000 Ohms. This range of wheels conform to BS2099 and BS2050 (table 1, Item 13) for Hospital use.

Wheel Dia. (mm) A	Tread Width (mm) B	Bearing Bore Size (mm) C	Hub Length (mm) D	Load Cap. (kg)	Bearing Type	Catalogue Reference
50	19	8	24	30	Plain	050AS02
63	25	10	30	50	Plain	063AS03
75	19	10	24	30	Plain	075AS02
75	25	10	30	50	Plain	075AS03
75	32	12	45	60	Plain	075AS04
100	19	10	24	30	Plain	100AS02
100	35	12	45	100	Plain	100AS04
125	38	12	45	120	Plain	125AS04
125	38	12	45	120	Roller	125AS14
150	45	20	60	275	Plain	150AS05
150	45	20	60	275	Roller	150AS15

Technical Sales: Tel: 0115 9786 004 Fax: 0115 9422 919

Email: sales@reidsofnottingham.co.uk www.reidsofnottingham.co.uk

PT Series Wheels

A range of polyurethane and vulkollan urethane elastomer tyred wheels. These tyres have a high tear strength, exceptional abrasion resistance and have a useful life of up to ten times that of equivalent rubber tyred wheels under similar conditions and load.

Load capacities are up to three times that of similar rubber tyred wheels, which means that smaller diameter wheels can be used if required. Vulkollan tyred wheels also offer excellent recovery from long periods of heavy static loading combined with low rolling resistance and floor saving.

Resistant to a wide range of oils, greases and chemicals, Vulkollen polyurethane is used on 150mm sized wheels and above and perform satisfactorily between -30C and +80C under normal conditions.

Polyurethanes are sensitive to hydrolising agents such as hot water, steam and hot moist air, strong acids and alcohols. A special grade with high hydrolysis resistance and no loss of load handling performance is available to special order. To order replace the letters **PT** with **WC** in the catalogue reference when ordering.

When fitting these wheels into brackets of the castor ranges indicated above, the load capacity of the complete castor must be downrated to the maximum rating shown in either the castor range assembly table, or that of the wheel, which is lower.

Headed Spacers

To fit ball journal wheels into castors use a pair of headed spacer bushes. These sleeve the bore and increase the hub width to match the castor frame and axle bolt. Details on request.

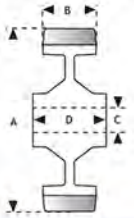

Wheel Dia. (mm) A	Tread Width (mm) B	Bearing Bore Size (mm) C	Hub Length (mm) D	Load Cap. (kg)	Bearing Type	Catalogue Reference
50	14	12	17	80	Plain	050PT0L
50	19	8	24	80	Plain	050PT0Z
63	25	10	30	135	Plain	063PT03
63	25	9.5	31	135	Roller	063PT13
75	19	10	24	90	Plain	075PT02
75	25	10	30	200	Plain	075PT03
75	25	12	45	175	Plain	075PT04
75	25	12	45	175	Roller	075PT14
75	25	15	45	175	Ball Journal	075PT24
100	19	10	24	150	Plain	100PT02
100	19	10	30	150	Plain	100PT03
100	29	12	45	250	Plain	100PT04
100	29	12	45	250	Roller	100PT14
100	38	20	60	340	Roller	100PT1H
100	38	20	57	340	Ball Journal	100PT2H
125	32	12	45	350	Plain	125PT04
125	32	12	45	350	Roller	125PT14
125	38	20	60	425	Roller	125PT1H
125	38	20	57	425	Ball Journal	125PT2H
150	38	20	60	730	Plain	150PT05
150	38	20	60	730	Roller	150PT15
150	38	20	57	730	Ball Journal	150PT2H
150	38	25	60	730	Roller	150PT1A
175	45	25	60	910	Roller	175PT1A
200	45	20	60	1100	Plain	200PT05
200	45	20	60	1100	Roller	200PT15
200	45	20	57	1100	Ball Journal	200PT2H
200	45	25	60	1100	Plain	200PT0A
200	45	25	60	1100	Roller	200PT1A
200	45	19	60	1100	Taper Roller	200PTTA
200	57	20	57	1300	Ball Journal	200PT2A
200	75	19	89	1800	Taper Roller	200PTTT
200	75	25.4	89	1800	Taper Roller	200PTTC
200	75	25	78	1800	Ball Journal	200PT2P
200	75	30	76	1800	Ball Journal	200PT2Q
250	45	25	60	1200	Roller	250PT1H
250	45	25	57	1200	Ball Journal	250PT2H
250	75	19	89	2500	Taper Roller	250PTTT
250	75	25.4	89	2500	Taper Roller	250PTTC
250	75	25	78	2500	Ball Journal	250PT2P
250	75	30	76	2500	Ball Journal	250PT2Q
300	45	25	60	1400	Roller	300PT1H
300	45	25	57	1400	Ball Journal	300PT2H
300	75	19	89	2750	Taper Roller	300PTTT
300	75	25.4	89	2750	Taper Roller	300PTTB
300	75	25	78	2750	Ball Journal	300PT2P
300	75	30	76	2750	Ball Journal	300PT2Q
400	100	25.4	114	4500	Taper Roller	400PTTT
400	100	35	104	4500	Ball Journal	400PT2A
400	125	50	121	6700	Taper Roller	400PTJJ